Numicon 6/NZ Year 8 Planning

The overviews and links in this document will help you to get the most out of your subscription to *Numicon Online NZ*.

You can follow *Numicon* as a complete teaching programme using the long-term plan provided here.

You can also access the rich bank of activities and resources to supplement your teaching. Pick a topic on the long-term plan, click on it for details and to open it in the online handbook.

Contents

Click on a link below to go straight there!

Long-term plan Page 2

This long-term plan shows you the recommended order for teaching the Numicon 6/NZ Year 8 Activity Groups over the school year. It includes links to the overview information for each Activity Group and links to open those activities in the online handbooks. Milestone markers on the plan take you to the skills and understanding children need to be secure in to help them progress.

Numicon Level	Strand and Activity Group Number		Activity Group Title
Numicon 5 review	Getting Started		Getting started with apparatus and imagery
Numicon 5 review	Numbers and the Number System	1	Working with numbers up to a million
Numicon 6	Numbers and the Number System	1 (part 1)	Working with numbers beyond a million and decimals *(Focus Activities 1–3 only: numbers beyond a million)*
Numicon 5 review	Numbers and the Number System	3	Understanding decimals
	Numbers and the Number System	5	Working with negative numbers *(Focus Activities 1–3 only)*
Numicon 6	Numbers and the Number System	1 (part 2)	Working with numbers beyond a million and decimals *(Focus Activity 4 only: decimals)*
Numicon 5 review	Calculating	1	Developing fluency with adding and subtracting calculations and understanding inverse relationships

Details for each unit of learning Page 6

These are overviews for each Activity Group. They follow the order in the long-term plan and list every activity in the Activity Group. Log into your subscription to Numicon Online NZ first, then click on any activity to open it in the online handbook. When you're in the online handbook you can go to the Links tab and download the accompanying resources, including any Explorer Progress worksheets, photocopy masters or Explore More homework.

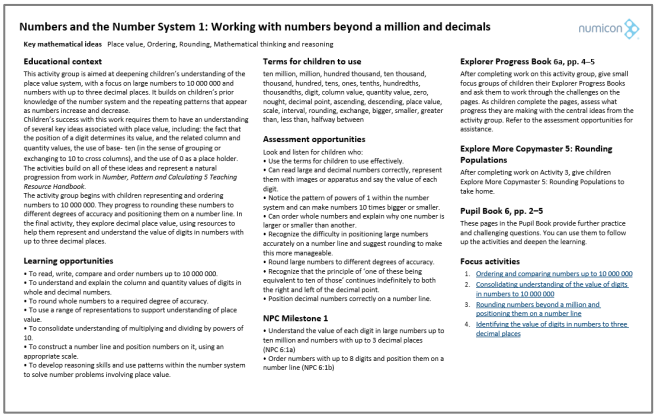

Numbers and the Number System 1: Working with numbers beyond a million and decimals

Key mathematical ideas Place value, Ordering, Rounding, Mathematical thinking and reasoning

Educational context

This activity group is aimed at deepening children's understanding of the place value system, with a focus on large numbers to 10 000 000 and numbers with up to three decimal places. It builds on children's prior knowledge of the number system and the repeating patterns that appear as numbers increase and decrease.
Children's success with this work requires them to have an understanding of several key ideas associated with place value, including: the fact that the position of a digit determines its value, and the related column and quantity values, the use of base- ten (in the sense of grouping or exchanging to 10 to cross columns), and the use of 0 as a place holder.
The activities build on all of these ideas and represent a natural progression from work in *Number, Pattern and Calculating 5 Teaching Resource Handbook*.
The activity group begins with children representing and ordering numbers to 10 000 000. They progress to rounding these numbers to different degrees of accuracy and positioning them on a number line. In the final activity, they explore decimal place value, using resources to help them represent and understand the value of digits in numbers with up to three decimal places.

Learning opportunities

- To read, write, compare and order numbers up to 10 000 000.
- To understand and explain the column and quantity values of digits in whole and decimal numbers.
- To round whole numbers to a required degree of accuracy.
- To use a range of representations to support understanding of place value.
- To consolidate understanding of multiplying and dividing by powers of 10.
- To construct a number line and position numbers on it, using an appropriate scale.
- To develop reasoning skills and use patterns within the number system to solve number problems involving place value.

Terms for children to use

ten million, million, hundred thousand, ten thousand, thousand, hundred, tens, ones, tenths, hundredths, thousandths, digit, column value, quantity value, zero, nought, decimal point, ascending, descending, place value, scale, interval, rounding, exchange, bigger, smaller, greater than, less than, halfway between

Assessment opportunities

Look and listen for children who:

- Use the terms for children to use effectively.
- Can read large and decimal numbers correctly, represent them with images or apparatus and say the value of each digit.
- Notice the pattern of powers of 1 within the number system and can make numbers 10 times bigger or smaller.
- Can order whole numbers and explain why one number is larger or smaller than another.
- Recognize the difficulty in positioning large numbers accurately on a number line and suggest rounding to make this more manageable.
- Round large numbers to different degrees of accuracy.
- Recognize that the principle of 'one of these being equivalent to ten of those' continues indefinitely to both the right and left of the decimal point.
- Position decimal numbers correctly on a number line.

NPC Milestone 1

- Understand the value of each digit in large numbers up to ten million and numbers with up to 3 decimal places (NPC 6:1a)
- Order numbers with up to 8 digits and position them on a number line (NPC 6:1b)

Explorer Progress Book 6a, pp. 4–5

After completing work on this activity group, give small focus groups of children their Explorer Progress Books and ask them to work through the challenges on the pages. As children complete the pages, assess what progress they are making with the central ideas from the activity group. Refer to the assessment opportunities for assistance.

Explore More Copymaster 5: Rounding Populations

After completing work on Activity 3, give children Explore More Copymaster 5: Rounding Populations to take home.

Pupil Book 6, pp. 2–5

These pages in the Pupil Book provide further practice and challenging questions. You can use them to follow up the activities and deepen the learning.

Focus activities

1. Ordering and comparing numbers up to 10 000 000
2. Consolidating understanding of the value of digits in numbers to 10 000 000
3. Rounding numbers beyond a million and positioning them on a number line
4. Identifying the value of digits in numbers to three decimal places

Assessment support Page 43

Milestone statements help you assess progress throughout the year and inform your teaching and planning. They indicate the skills and understanding children need to be secure in as they progress through the teaching programme before they are able to successfully meet new ideas. This section includes a link to the set of question cards that can be used for assessment or self-assessment and to a tracking spreadsheet to help you record that information.

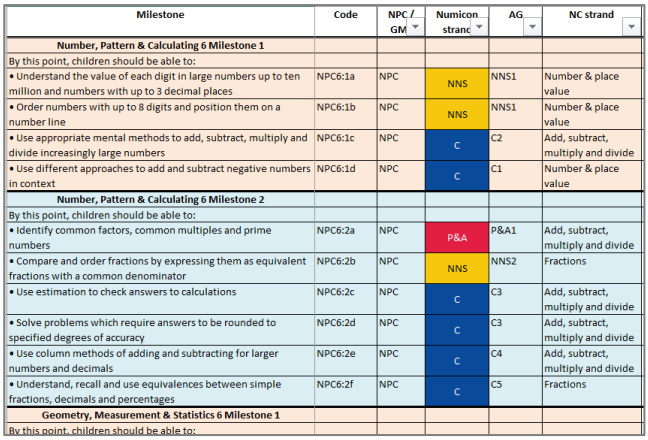

Milestone	Code	NPC / GM	Numicon strand	AG	NC strand
Number, Pattern & Calculating 6 Milestone 1					
By this point, children should be able to:					
• Understand the value of each digit in large numbers up to ten million and numbers with up to 3 decimal places	NPC6:1a	NPC	NNS	NNS1	Number & place value
• Order numbers with up to 8 digits and position them on a number line	NPC6:1b	NPC	NNS	NNS1	Number & place value
• Use appropriate mental methods to add, subtract, multiply and divide increasingly large numbers	NPC6:1c	NPC	C	C2	Add, subtract, multiply and divide
• Use different approaches to add and subtract negative numbers in context	NPC6:1d	NPC	C	C1	Number & place value
Number, Pattern & Calculating 6 Milestone 2					
By this point, children should be able to:					
• Identify common factors, common multiples and prime numbers	NPC6:2a	NPC	P&A	P&A1	Add, subtract, multiply and divide
• Compare and order fractions by expressing them as equivalent fractions with a common denominator	NPC6:2b	NPC	NNS	NNS2	Fractions
• Use estimation to check answers to calculations	NPC6:2c	NPC	C	C3	Add, subtract, multiply and divide
• Solve problems which require answers to be rounded to specified degrees of accuracy	NPC6:2d	NPC	C	C3	Add, subtract, multiply and divide
• Use column methods of adding and subtracting for larger numbers and decimals	NPC6:2e	NPC	C	C4	Add, subtract, multiply and divide
• Understand, recall and use equivalences between simple fractions, decimals and percentages	NPC6:2f	NPC	C	C5	Fractions
Geometry, Measurement & Statistics 6 Milestone 1					
By this point, children should be able to:					

NB If your children are not reaching age-related expectations, you may wish to use *Numicon Big Ideas* first so that children can access the Year 7 and 8 content. This is a 12-week programme.
See https://www.edushop.nz/product/1558412 for more details.

© Oxford University Press 2025

Long-term plan for Numicon 6 (NZ Year 8)

There are two Numicon teaching handbooks for each level – Number Pattern Calculating (NPC) and Geometry measurement and Statistics (GMS). Subscribers to *Numicon Online NZ* have access to a digital version of these. Print versions are also available (visit: www.edushop.nz). The units in these books are called Activity Groups. They contain a collection of activities you can use with your class.

This long-term plan shows you the recommended order for teaching the Activity Groups over the school year.
- Click on a heading in the **second** column to get all the information for that Activity Group.
- Click on an Activity Group title in the **third** column to go straight to those activities in the online handbooks.

Milestones

To help you monitor learning, the skills and understanding children need to be secure with as they progress through the programme have been captured in a series of milestone statements. Click on the milestone icons to see these. Extra support to help you use these is provided at the end of this document.

© Oxford University Press 2025

Number, Pattern and Calculating 6

Geometry, Measures and Statistics 6

Statistics and Probability Booklet 6

Each Activity Group should take around one week. However, some may take more/less time than others, so please use your professional judgment to fit the Activity Groups into your school year.

We have added 'review' units from Numicon 5 to support children who may not be ready for the Numicon 6 / Year 8 content. Skip over the review units if students are already secure in these concepts and skills.

Numicon Level	Strand and Activity Group Number		Activity Group Title
Numicon 5 review	Getting Started		Getting started with apparatus and imagery
Numicon 5 review	Numbers and the Number System	1	Working with numbers up to a million
Numicon 6	Numbers and the Number System	1 (part 1)	Working with numbers beyond a million and decimals *(Focus Activities 1–3 only: numbers beyond a million)*
Numicon 5 review	Numbers and the Number System	3	Understanding decimals
	Numbers and the Number System	5	Working with negative numbers *(Focus Activities 1–3 only)*
Numicon 6	Numbers and the Number System	1 (part 2)	Working with numbers beyond a million and decimals *(Focus Activity 4 only: decimals)*
Numicon 5 review	Calculating	1	Developing fluency with adding and subtracting calculations and understanding inverse relationships
Numicon 6	Calculating	1 (part 1)	Adding and subtracting negative numbers in context, and large numbers *(Focus Activities 4 and 5 only: large numbers)*
Numicon 5 review	Calculating	4	Developing fluency with multiplying and dividing
	Numbers and the Number System	5	Working with negative numbers *(Focus Activities 4–6 only)*
Numicon 6	Calculating	2	Multiplying and dividing
	Calculating	1 (part 2)	Adding and subtracting negative numbers in context, and large numbers *(Focus Activities 1–3 only: negative numbers)*
			NPC Milestone 1
Numicon 6	Measurement	1	Statistics, charts and graphs
Numicon 5 review	Pattern and Algebra	3	Properties of number *(Focus Activities 1–5 only)*
	Pattern and Algebra	4	Looking for patterns and generalizing *(Focus Activity 6 only)*
	Pattern and Algebra	5	Using equivalence to solve problems *(Focus Activity 7 only)*
Numicon 6	Pattern and Algebra	1	Multiples, factors and primes

© Oxford University Press 2025

Numicon Level	Strand and Activity Group Number		Activity Group Title
Numicon 5 review	Numbers and the Number System	2	Exploring equivalence with fractions
	Numbers and the Number System	6	Comparing and ordering fractions
Numicon 6	Numbers and the Number System	2	Fractions
Numicon 6	Statistics and Probability	1	Using graphs for statistical investigations
Numicon 6	Calculating	3	Estimating, rounding and equivalence
Numicon 6	Calculating	4	Column methods for adding and subtracting
Numicon 6	Calculating	5	Percentages
			NPC Milestone 2
Numicon 6	Geometry	1	2D shapes and angles
			GMS Milestone 1
Numicon 6	Calculating	6	Exploring calculations: multi-step non-routine problems and order of operations
Numicon 6	Calculating	7	Ratio and proportion
Numicon 6	Statistics and Probability	2	Further probability investigations
Numicon 6	Measurement	2	Areas of 2D shapes
Numicon 6	Calculating	8	Converting fractions and decimals
Numicon 6	Pattern and Algebra	2	Exploring number sequences and relationships
			NPC Milestone 3
Numicon 6	Measurement	3	3D shapes – nets and surface area
			GMS Milestone 2
Numicon 6	Calculating	9	Written column methods of multiplying
Numicon 6	Calculating	10	Introducing long written methods of dividing
Numicon 6	Measurement	4	Volume and scaling
Numicon 6	Calculating	11	Adding and subtracting with fractions
Numicon 6	Calculating	12	Multiplying and dividing fractions
Numicon 6	Pattern and Algebra	3	Using algebra to solve problems
			NPC Milestone 4

© Oxford University Press 2025

Numicon Level	Strand and Activity Group Number	Activity Group Title
Numicon 6	Preparing for Formal Testing 1–5	Self-assessment and choosing imagery Problem solving strategies Fluency in calculating with whole numbers and decimals Fluency in calculating with fractions and decimals Preparing to do maths in test conditions
Numicon 6	Geometry 2	Circles
Numicon 6	Calculating 13	Solving non-routine problems using all four operations
Numicon 6	Geometry 3	Transformations in the four quadrants
		GMS Milestone 3
Numicon 6	Pattern and Algebra 4	Using symbols and letters for variables and unknowns
		NPC Milestone 5

NPC and GMS Investigating activity groups

The investigating activities are independent and can be followed in any order. You may choose to use some or all of the topics with your class, according to their interests and the time available.

NPC Investigating	1	Making squares
NPC Investigating	2	What did I do?
NPC Investigating	3	How many ways?
NPC Investigating	4	Decimal patterns
NPC Investigating	5	Which is the best value?
NPC Investigating	6	An enterprise project
GMS Investigating	1	Shape shifting
GMS Investigating	2	Macro maths
GMS Investigating	3	Interesting information

© Oxford University Press 2025

Numicon 5 Getting Started: Getting started with apparatus and imagery

Key mathematical ideas Pattern, Adding, Subtracting, Multiplying, Dividing, Place value, Mathematical thinking and reasoning

Educational context

This activity group helps children and teachers to become familiar with structured apparatus, including Numicon Shapes, number rods and base-ten apparatus, and to make connections between the patterns and structures they see and their number ideas. Actions for the four calculating symbols are also introduced.

Building familiarity with the different apparatus will enable children to choose the resources they need to support them with their work in the rest of the *Number, Pattern and Calculating 5 Teaching Resource Handbook*. As children become more familiar with the different apparatus, encourage them to shut their eyes and visualize it. Once children are comfortable with the apparatus, ensure it is readily available and encourage them to select what they need for different activities.

This activity group will give teachers valuable insights into children's mathematical understanding. This will help with initial assessing, which in turn may inform how teachers decide to group children. If children are not accustomed to working on open-ended activities some of their initial responses may be superficial. Encourage them to persevere until they develop the confidence to find things out for themselves.

Children who have had limited or no previous experience using apparatus and imagery may need two or three days to explore these Getting Started activities before moving on to the Numbers and the Number System, Calculating, and Pattern and Algebra activity groups.

Learning opportunities

- To connect Numicon Shapes, number rods and base-ten apparatus with number ideas.
- To connect structured apparatus with numerals, number words and positions on a number line.
- To see and explain patterns in number relationships illustrated with structured apparatus.
- To describe number relationships using mathematical language.
- To revise the mathematical language for calculating operations.
- To revise actions representing the symbols of arithmetic notation: +, −, =, ×, ÷.
- To revise use of 'is less/fewer than' and 'is greater/more than' symbols (< and >, respectively).
- To revise methods of adding, subtracting, multiplying and dividing.

Terms for children to use

number names to 100 and beyond, pattern, next, before, after, in between, ordinal number names (e.g. first, second, third), terms for comparing (e.g. small, smaller than, smallest, long, longer than, longest, few, fewer than, fewest, more than, less than, greater than), set, add, altogether, total, more, take away, subtract, difference, decrease, how many more to reach … ?, multiply, times, divide, share between, equal, visualize, factor, multiple, decimal, fractions

Assessment opportunities

Look and listen for children who:

- Use the terms for children to use effectively.
- Notice and describe the attributes of Numicon Shapes and number rods and use these to sort both Shapes and rods in different ways.
- Refer to Numicon Shapes, number rods and base-ten apparatus by number name, order them and describe relationships between them.
- Connect Numicon Shapes, number rods, numerals and number names with positions on a number line.
- Recognize and use the language for adding, subtracting, multiplying and dividing and the symbols +, −, ×, ÷, =, < and >.
- Use structured apparatus to illustrate their thinking.
- Describe relationships they see in structured apparatus using mathematical language.
- Use methods of adding, subtracting, multiplying and dividing effectively.

If children have ongoing difficulties they are likely to need additional and differentiated support. Refer back to the *Number Pattern and Calculating 3 and 4 Teaching Resource Handbooks* for activities to establish children's understanding of earlier ideas. If any children are experiencing more fundamental difficulties, consider running the Numicon Intervention Programme for them.

Explorer Progress Book 5a, pp. 2–3

After completing work on this activity group, give small focus groups of children their Explorer Progress Books and ask them to work through the challenges on the pages. As children complete the pages, assess what progress they are making with the central ideas from the activity group. Refer to the assessment opportunities for assistance.

Explore More Copymaster 1: Talking About Numicon Shapes

After completing work on Activity 1, give children Explore More Copymaster 1: Talking About Numicon Shapes to take home.

Focus activities

1. What maths can you show with Numicon Shapes?
2. What maths can you show with number rods?
3. Finding how many without counting
4. Describing relationships between Numicon Shapes or number rods
5. Cover the board with Numicon Shapes
6. Supporting calculating with Numicon Shapes or number rods
7. What maths can you show with base-ten apparatus?

© Oxford University Press 2025

Numicon 5 Numbers and the Number System 1: Working with numbers up to a million

Key mathematical ideas Counting, Place value, Ordering, Mathematical thinking and reasoning

Educational context

This activity group is designed to help children generalize what they know about place value from their handling of smaller numbers to reading, writing and interpreting much larger numbers. Children's success will depend on their existing understanding of how we name numbers up to 1000.
Children are introduced to everyday contexts in which larger numbers are important, and are invited to read both the 'column' and the 'quantity' values of the digits in larger numbers. They try to visualize larger numbers with the aid of base-ten apparatus, and explore the relationships between powers of 10 (1, 10, 100, 1000, and so on).
They build on this work to investigate counting in steps of powers of 10 starting at any number, to order larger numbers, and to read, write and compare larger numbers represented with Roman numerals. Note that children are not expected to use the language of 'powers' until later in their maths learning; they instead consider, e.g. 'steps of 10, 100 and 1000'.
This work has important links with Numbers and the Number System 3, in which children are invited to generalize their understanding of place value in the other direction – that is, to the right-hand side of the decimal point – so as to name increasingly small decimal fractions.

Learning opportunities

- To develop understanding of the quantity and column value of numbers to 1000, extending to 10 000.
- To find the position of numbers to 1000 on a number line.
- To know that 1000 is equivalent to 10 groups of 100.
- To be able to visualize, describe or draw 2-, 3- and 4-digit numbers.
- To understand the role of 0 as a placeholder.
- To connect knowledge of numbers to measures.
- To appreciate that the base-ten system is used in other cultures.

Terms for children to use

estimate, in between, number names to 1 000 000, place value, base-ten, multiples of 10, steps of … , placeholder, zero, column value, quantity value, more than, less than, Roman numeral

Assessment opportunities

Look and listen for children who:
- Use the terms for children to use effectively.
- Show understanding of the quantity value of larger numbers in real-world contexts.
- Read 6-digit numbers represented in different ways, e.g. on measuring instruments and place value grids.
- Explain how to represent numbers greater than 10 000 with base-ten apparatus.
- Write 6- and 7-digit numbers.
- Connect column and quantity value in numbers up to 1 000 000.
- Use 0 as a placeholder in numbers up to 1 000 000.
- Count in steps of 1000 from any number, recognizing which digit changes when a place value boundary is crossed.
- Use < and > symbols to order numbers with up to seven digits.
- Read and write Roman numerals up to 1000 (M) and recognize year numbers written in Roman numerals.

NPC Milestone 1

- Read, write, and convert between column and quantity values of numbers up to 1 000 000 (NPC 5:1a)
- Count in steps of powers of 10 forwards and backwards from any number, and explain which digit changes when a place value boundary is crossed (NPC 5:1b)

Explorer Progress Book 5a, pp. 4–5

After completing work on this activity group, give small focus groups of children their Explorer Progress Books and ask them to work through the challenges on the pages. As children complete the pages, assess what progress they are making with the central ideas from the activity group. Refer to the assessment opportunities for assistance.

Explore More Copymaster 8: Charity Fundraiser

After completing work on Activity 4, give children Explore More Copymaster 8: Charity Fundraiser to take home.

Pupil Book 5, pp. 2–5

These pages in the Pupil Book provide further practice and challenging questions. You can use them to follow up the activities and deepen the learning.

Focus activities

1. Reading larger numbers
2. Reading meters and recording large numbers
3. Visualizing a million
4. Extending the place value frame
5. Exploring equivalence in place value
6. Counting in powers of ten
7. Ordering 5- and 6-digit numbers
8. Reading Roman numerals

© Oxford University Press 2025

Numbers and the Number System 1: Working with numbers beyond a million and decimals

Key mathematical ideas Place value, Ordering, Rounding, Mathematical thinking and reasoning

Educational context

This activity group is aimed at deepening children's understanding of the place value system, with a focus on large numbers to 10 000 000 and numbers with up to three decimal places. It builds on children's prior knowledge of the number system and the repeating patterns that appear as numbers increase and decrease.

Children's success with this work requires them to have an understanding of several key ideas associated with place value, including: the fact that the position of a digit determines its value, and the related column and quantity values, the use of base- ten (in the sense of grouping or exchanging to 10 to cross columns), and the use of 0 as a place holder.

The activities build on all of these ideas and represent a natural progression from work in *Number, Pattern and Calculating 5 Teaching Resource Handbook*.

The activity group begins with children representing and ordering numbers to 10 000 000. They progress to rounding these numbers to different degrees of accuracy and positioning them on a number line. In the final activity, they explore decimal place value, using resources to help them represent and understand the value of digits in numbers with up to three decimal places.

Learning opportunities

- To read, write, compare and order numbers up to 10 000 000.
- To understand and explain the column and quantity values of digits in whole and decimal numbers.
- To round whole numbers to a required degree of accuracy.
- To use a range of representations to support understanding of place value.
- To consolidate understanding of multiplying and dividing by powers of 10.
- To construct a number line and position numbers on it, using an appropriate scale.
- To develop reasoning skills and use patterns within the number system to solve number problems involving place value.

Terms for children to use

ten million, million, hundred thousand, ten thousand, thousand, hundred, tens, ones, tenths, hundredths, thousandths, digit, column value, quantity value, zero, nought, decimal point, ascending, descending, place value, scale, interval, rounding, exchange, bigger, smaller, greater than, less than, halfway between

Assessment opportunities

Look and listen for children who:

- Use the terms for children to use effectively.
- Can read large and decimal numbers correctly, represent them with images or apparatus and say the value of each digit.
- Notice the pattern of powers of 1 within the number system and can make numbers 10 times bigger or smaller.
- Can order whole numbers and explain why one number is larger or smaller than another.
- Recognize the difficulty in positioning large numbers accurately on a number line and suggest rounding to make this more manageable.
- Round large numbers to different degrees of accuracy.
- Recognize that the principle of 'one of these being equivalent to ten of those' continues indefinitely to both the right and left of the decimal point.
- Position decimal numbers correctly on a number line.

NPC Milestone 1

- Understand the value of each digit in large numbers up to ten million and numbers with up to 3 decimal places (NPC 6:1a)
- Order numbers with up to 8 digits and position them on a number line (NPC 6:1b)

Explorer Progress Book 6a, pp. 4–5

After completing work on this activity group, give small focus groups of children their Explorer Progress Books and ask them to work through the challenges on the pages. As children complete the pages, assess what progress they are making with the central ideas from the activity group. Refer to the assessment opportunities for assistance.

Explore More Copymaster 5: Rounding Populations

After completing work on Activity 3, give children Explore More Copymaster 5: Rounding Populations to take home.

Pupil Book 6, pp. 2–5

These pages in the Pupil Book provide further practice and challenging questions. You can use them to follow up the activities and deepen the learning.

Focus activities

1. Ordering and comparing numbers up to 10 000 000
2. Consolidating understanding of the value of digits in numbers to 10 000 000
3. Rounding numbers beyond a million and positioning them on a number line
4. Identifying the value of digits in numbers to three decimal places

© Oxford University Press 2025

Numicon 5 Numbers and the Number System 3: Understanding decimals

Key mathematical ideas Fractions, Equivalence, Multiplying (scaling structure), Place value, Mathematical thinking and reasoning

Educational context

These activities build on the ideas introduced in the Number, Pattern and Calculating 4 Teaching Resource Handbook, Numbers and the Number System 6 and 8, and help children make connections between common fractions (explored in Numbers and the Number System 2) and decimal fractions. Both of these types of fraction are used to describe proportions, but in different notation – rather like describing the same thing in different languages.

Building on children's experience, e.g. from the *Geometry, Measurement and Statistics 4 Teaching Resource Handbook*, Measurement 3, 4 and 5, measuring is used here to provide a relevant context, as a situation in which parts or proportions of units often need to be described. Digital measuring instruments are used to emphasize the frequency with which decimals occur in everyday life, as well as to give children experience of converting between units and to emphasize that adding 0s to the right of a decimal number does not change its value.

Children explore the relationship between fractions and dividing, using a calculator to find and investigate common and decimal fraction equivalents by entering dividing calculations. They are also introduced to thousandths.

Much use is made of visual imagery to illustrate proportions. In particular, double number lines are used to illustrate equivalence and base-ten apparatus to illustrate thousandths. The overall aim is for children to develop their communicating about parts and proportions using the language of both decimal and common fractions, and as a result to appreciate their equivalence.

Learning opportunities

- To interpret decimal notation in the context of measuring and convert between measurements in different units, e.g. between kilograms, kilograms and grams, and grams.
- To recognize the equivalence between decimal numbers and common fractions, including mixed numbers, e.g. 0·23 and $\frac{23}{100}$, 5·268 and $\frac{5268}{1000}$.
- To know the decimal equivalents of familiar common fractions, including $\frac{1}{4}$ = 0·25, $\frac{3}{4}$ = 0·75, $\frac{1}{5}$ = 0.2 and $\frac{1}{10}$ = 0.1.
- To use the relationship between fractions and dividing to use a calculator to convert between common and decimal fractions.
- To recognize thousandths represented as decimal and common fractions, and understand their size and place value relationships with hundredths, tenths and ones.
- To use understanding of place value to read, write, order and compare numbers with up to three decimal places, including identifying numbers within a given interval.

Terms for children to use

ones, tenths, hundredths, thousandths, equivalence, unit of measure, common fraction, decimal fraction, decimal point, place value, whole number, decimal place, part-whole relationship, in between, interval

Assessment opportunities

Look and listen for children who can:

- Use the terms for children to use effectively.
- Read and interpret decimal numbers shown on digital measuring equipment.
- Appreciate that adding 0 to the right of a decimal number does not change its size.
- Convert measurements between units, making use of decimal notation, e.g. between kg, kg and g, and g.
- Read and write numbers with up to three decimal places.
- Position decimal fractions on a number line.
- Explain the relationships between ones, tenths, hundredths and thousandths.
- Explain common fraction and decimal equivalents, e.g. 0·323 and $\frac{323}{1000}$ and illustrate them on a number line
- Recognize familiar decimal and common fraction equivalents, e.g. $\frac{1}{2}$ = 0·5, $\frac{3}{4}$ = 0·75, $\frac{1}{5}$ = 0.2 and $\frac{1}{10}$ = 0.1.
- Recognize the relationship between fractions and dividing including using a calculator to find the decimal equivalent of a common fraction, e.g. $\frac{1}{5}$ = 1 ÷ 5 = 0.2 and
- Represent decimal fractions with base-ten apparatus.
- Give decimal numbers which lie between given consecutive whole numbers, tenths or hundredths, e.g. between 6 and 7, 6·4 and 6·5, 6·43 and 6·44.
- Compare and order decimal numbers by looking at the most significant digits first.

NPC Milestone 1

- Read, write and order numbers with up to three decimal places (NPC 5:1e)
- Recognize and explain decimal and common fraction equivalents, e.g. 0.268 including familiar common fraction equivalents, e.g. = 0.2 (NPC 5:1f)

Explorer Progress Book 5a, pp. 8–9

After completing work on this activity group, give small focus groups of children their Explorer Progress Books and ask them to work through the challenges on the pages. As children complete the pages, assess what progress they are making with the central ideas from the activity group. Refer to the assessment opportunities for assistance.

Explore More Copymaster 10: Fraction Pairs

After completing work on Activity 3, give children Explore More Copymaster 10: Fraction Pairs to take home.

Pupil Book 5, pp. 10–13

These pages in the Pupil Book provide further practice and challenging questions. You can use them to follow up the activities and deepen the learning.

Focus activities

1. Revisiting the use of decimals in measurement
2. Making connections between fractions and decimals – tenths
3. Making connections between fractions and decimals – hundredths
4. Representing decimals with base-ten apparatus
5. Decimal number lines
6. Introducing thousandths
7. Comparing decimals
8. Ordering decimals in a list

© Oxford University Press 2025

Numicon 5 Numbers and the Number System 5: Working with negative numbers

Key mathematical ideas Fractions, Equivalence, Mathematical thinking and reasoning

Educational context

Building on the introductory work in the *Number, Pattern and Calculating 4 Teaching Resource Handbook*, Numbers and the Number System 4, these activities explore the use of negative numbers in a variety of everyday contexts emphasizing the reasonableness of such numbers. The essential idea for children to understand mathematically is that numbers can have a 'direction' as well as a size ('magnitude'). Children use the number line to support and illustrate their early calculating with 'directed numbers' in particular the calculation of differences between these numbers, or what we would otherwise call subtraction.
Importantly, children are also asked explicitly to order directed numbers both in the context of temperature and on a number line. This raises important discussion points about whether ⁻18 is 'bigger' or 'smaller' than ⁻23. At this stage it is probably best to focus simply on direction and agree with children that ⁻18 is 'to the right of' ⁻23, or, in the context of temperature, ⁻18°C is 'warmer' than ⁻23°C.

Learning opportunities

- To interpret negative numbers in context.
- To count forward and back through zero with positive and negative whole numbers.
- To order negative numbers using < and > symbols.
- To calculate differences between positive and negative numbers.

Terms for children to use

negative, positive, minus, plus, thermometer, temperature, levels, horizontal, vertical, increasing, decreasing, direction, magnitude

Assessment opportunities

Look and listen for children who can:
- Use the terms for children to use effectively.
- Read and write negative numbers.
- Recognize and interpret positive and negative numbers on a scale.
- Notice the symmetry in the negative number line.
- Explain that the magnitude of negative numbers increases the further their distance from 0.
- Order positive and negative numbers.
- Make connections with adding and subtracting and movements forwards and backwards on the negative number line, noticing how inverse operations affect each other.
- Compare numbers, including negative numbers, using < and > symbols in the context of temperature.
- Explain that calculating the difference between a positive and a negative number involves adding the amount from 0 to the positive number to the amount from 0 to the negative number.
- Recognize movement to the right (or forwards) on the number line as the positive direction and movement to the left (or backwards) as the negative direction.

NPC Milestone 2

- Read, write and order positive and negative numbers (NPC 5:2e)
- Calculate the difference between a positive and a negative number (NPC 5:2f)

Explorer Progress Book 5a, pp. 20–23

After completing work on this activity group, give small focus groups of children their Explorer Progress Books and ask them to work through the challenges on the pages. As children complete the pages, assess what progress they are making with the central ideas from the activity group. Refer to the assessment opportunities for assistance.
Children will also have the opportunity to complete their Learning Log (pp. 22–23) where they can reflect on the mathematics they have done so far.

Explore More Copymaster 12: Cold Places

After completing work on Activity 3, give children Explore More Copymaster 12: Cold Places to take home.

Pupil Book 5, pp. 42–45

These pages in the Pupil Book provide further practice and challenging questions. You can use them to follow up the activities and deepen the learning.

Focus activities

1. Understanding negative numbers
2. Exploring negative numbers in the context of temperature
3. Drawing negative number lines horizontally
4. Comparing temperatures
5. Calculating differences between positive and negative numbers
6. Negative numbers and direction

© Oxford University Press 2025

Calculating 1: Developing fluency with adding and subtracting calculations and understanding inverse relationships

Key mathematical ideas Adding, Subtracting, Inverse, Pattern, Mathematical thinking and reasoning

Educational context

The activities in this group are designed to develop children's fluency with adding and subtracting calculations involving whole numbers, fractions and decimals, with the aim of encouraging children increasingly to calculate mentally.
Discussion and illustration of strategies is used throughout to support this aim.
There is much non-computational thinking to be done in this activity group, as children convert calculations from one form into another. Inverse relationships are useful – subtracting can sometimes helpfully be turned into adding (and vice versa) – as are rounding and compensating. The usefulness of multiples of 10 is also emphasized.
Calculations are presented within a variety of problem contexts, including money, measurement and statistics, as well as in the form of number puzzles.
Throughout the activity group encourage children to explore different ways of approaching calculations and ensure there is plenty of discussion and illustration.
Vary the numbers involved as needed – use, e.g. larger numbers, more decimal places, more complex fractions or mixed numbers – in order to ensure children are challenged to consider carefully how to find the answer.
The major aim of the work is to encourage children to think flexibly about calculating, and always to seek a variety of ways to carry out any calculation.

Learning opportunities

- To add and subtract increasingly large whole numbers mentally.
- To convert adding problems into subtracting problems, and vice versa.
- To add and subtract numbers with up to two decimal places.
- To add and subtract fractions and mixed numbers with the same denominator.

Terms for children to use

add, sum, total, subtract, difference, equals, number trio, adjust, integers, decimals, common fractions, inverse relationship, mental methods, complements, number bonds, number facts

Assessment opportunities

Look and listen for children who can:
- Use the terms for children to use effectively.
- Use fluent recall of adding and subtracting facts to solve problems.
- Adjust numbers in a calculation to find equivalent solutions.
- Use the inverse relationship between adding and subtracting to convert a subtracting problem into an adding one and vice versa.
- Solve adding and subtracting problems in the context of money.
- Solve adding and subtracting problems in the context of measures.
- Use adding and subtracting facts to find missing numbers in fraction problems, where fractions have the same denominator.
- Add and subtract numbers with up to two decimal places.

NPC Milestone 1

- Choose appropriate and effective mental or written methods to solve adding and subtracting number problems involving whole numbers up to 1000 (NPC 5:1g)
- Solve adding and subtracting problems involving fractions and decimal fractions efficiently (NPC 5:1h)

Explorer Progress Book 5a, pp. 10–11

After completing work on this activity group, give small focus groups of children their Explorer Progress Books and ask them to work through the challenges on the pages. As children complete the pages, assess what progress they are making with the central ideas from the activity group. Refer to the assessment opportunities for assistance.

Explore More Copymaster 15: Days Out

After completing work on Activity 3, give children Explore More Copymaster 15: Days Out to take home.

Pupil Book 5, pp. 18–21

These pages in the Pupil Book provide further practice and challenging questions. You can use them to follow up the activities and deepen the learning.

Focus activities

1. Using adding and subtracting facts to solve problems
2. Using adding and subtracting facts to solve money problems
3. Using adding and subtracting facts to solve missing measurement problems
4. Using adding and subtracting facts to solve missing number problems involving fractions
5. Using adding and subtracting facts to solve problems involving decimals
6. Using adding and subtracting facts to solve puzzles involving decimals
7. Using adding and subtracting facts to find numbers in a Venn diagram

© Oxford University Press 2025

Calculating 1: Adding and subtracting negative numbers in context, and large numbers

Key mathematical ideas Counting, Place value, Mathematical thinking and reasoning

Educational context

In this activity group children draw on their understanding of adding and subtracting to solve problems involving negative numbers in context and to calculate with large numbers. In Activity 1 they use negative numbers in the context of temperature, revisiting the number line before going on to add and subtract across 0 in Activity 2.
Larger negative numbers are introduced in Activity 3, where children work together to calculate profit and loss.
Activities 4 and 5 involve them in further exploration of adding and subtracting large numbers, with the aim of encouraging flexibility and fluency in children's calculating, enabling them to choose effectively among a variety of possible methods and strategies. Throughout, encourage children to think carefully about the numbers they encounter, and to explain their reasons for choosing a particular approach to calculating.
As children prepare for doing a range of routine calculations in a test environment, see Preparing for Formal Testing 3, Activity 6.

Learning opportunities

- To consolidate understanding of negative numbers.
- To find the difference between a positive and a negative number.
- To understand adding and subtracting calculations which cross 0 in context, e.g. −3 + 8 = 5, 4 − 9 = −5.
- To use different approaches for adding and subtracting negative numbers in context, and larger numbers.
- To consolidate strategies for adding and subtracting mentally or with an informal method with large numbers, including partitioning, bridging and complements.
- To use algebraic thinking to solve missing number problems.

Terms for children to use

negative, positive, minus, plus, above/below zero, direction, size, magnitude, data, exact, approximate, rough, typical, vary, interval, difference, infinity, total, sum, bridging, partitioning, rounding, adjusting, complements, equivalence, finding the difference, taking away, unknown

Assessment opportunities

Look and listen for children who:
- Use the terms for children to use effectively.
- Order negative and positive numbers correctly and show their positions on a number line.
- Use a number line to show the effect of adding or subtracting a positive number across 0 in context, and write the related number sentence, e.g. −3 + 8 = 5, 4 − 9 = −5.
- Explain that calculating the difference between a positive and a negative number involves adding the magnitudes, that is, the 'distance' from 0, of both numbers.
- Choose appropriately between a range of strategies for adding and subtracting large numbers mentally.
- Use an understanding of inverse operations to solve missing number problems involving adding or subtracting large numbers.

NPC Milestone 1

- Use different approaches to add and subtract negative numbers in context (NPC 6:1d)

Explorer Progress Book 6a, pp. 6–7

After completing work on this activity group, give small focus groups of children their Explorer Progress Books and ask them to work through the challenges on the pages. As children complete the pages, assess what progress they are making with the central ideas from the activity group. Refer to the assessment opportunities for assistance.

Explore More Copymaster 7: Shape-man

After completing work on Activity 3, give children Explore More Copymaster 7: Shape-man to take home.

Pupil Book 6, pp. 6–9

These pages in the Pupil Book provide further practice and challenging questions. You can use them to follow up the activities and deepen the learning.

Focus activities

1. Using negative numbers
2. Finding differences: Adding and subtracting across 0
3. Adding and subtracting large numbers across 0
4. Adding and subtracting large numbers
5. Calculating missing numbers

© Oxford University Press 2025

Numicon 5 Calculating 4: Developing fluency with multiplying and dividing

Key mathematical ideas Multiplying, Dividing, Pattern, Fractions, Decimals, Mathematical thinking and reasoning

Educational context

The activities in this group focus firstly on developing children's fluency with recognizing and recalling basic multiplying and dividing facts, rehearsing use of the terms 'factor' and 'multiple'. Later the focus is on practising the short written methods of multiplying and dividing introduced in e.g. the *Number, Pattern and Calculating 3 Teaching Resource Handbook*, Calculating 15 and the *Number, Pattern and Calculating 4 Teaching Resource Handbook*, Calculating 10, 11, 12 and 13.
In all of this work children should be encouraged to discuss, explain and communicate their thinking using plenty of illustration. In Activities 2 and 3, much emphasis is placed upon children thinking through possibilities systematically. The activity group concludes by asking children to connect multiplying and dividing with proportions of a given whole, thus making explicit connections between fractions and multiplying and dividing, which are crucial to developing children's 'multiplicative thinking'. Activities 8 and 9 give children who are confident with multiplying and dividing facts and with place value opportunities to apply their understanding to multiply and divide with decimals.

Learning opportunities

- To multiply and divide numbers mentally drawing upon known facts.
- To solve missing number problems involving multiplying.
- To estimate to check short written multiplying calculations.
- To estimate to check short written dividing calculations.
- To find fractions of amounts using multiplying and dividing facts.
- To multiply and divide decimals to one decimal place

Terms for children to use

multiply, times, product, multiplying, dividing, divisor, quotient, multiplication tables, times tables, times tables square, commutative property, multiplying and dividing facts, symmetry, multiples, factor, relationships, place value, digits, scale, balancing calculations, equals, equivalent, equivalence statements, decimal, short written dividing, short written multiplying, approximate, estimate

Assessment opportunities

Look and listen for children who can:
- Use the terms for children to use effectively.
- Explain that the commutative property of multiplying reduces the number of facts they have to learn.
- Recognize patterns in multiplication tables and use these to make general rules for tables they are learning.
- Are developing fluency with a growing number of multiplying facts.
- Have strategies for working out multiplying facts they cannot yet recall.
- Recognize when to use their knowledge of times tables facts, factors and multiples to solve problems.
- Use knowledge of multiples and related dividing facts to identify common factors.
- Show understanding of the associative property of multiplying by explaining that they can change the order of numbers in multiplication calculations and the product will be the same.
- Use knowledge of factors to work out missing numbers in multiplying calculations and to find equivalent multiplying expressions.

NPC Milestone 2

- Use multiplying and dividing facts and knowledge of factors and multiples to solve problems (NPC 5:2g)
- Solve problems effectively by finding fractions of amounts, making use of multiplying and dividing facts (NPC 5:2h)
- Multiply and divide decimals to one decimal place (NPC 5:2i)

Explorer Progress Book 5b, pp. 2–3

After completing work on this activity group, give small focus groups of children their Explorer Progress Books and ask them to work through the challenges on the pages. As children complete the pages, assess what progress they are making with the central ideas from the activity group. Refer to the assessment opportunities for assistance.

Explore More Copymaster 18: Multiplying Match

After completing work on Activity 4, give children Explore More Copymaster 18: Multiplying Match to take home.

Pupil Book 5, pp. 46–49

These pages in the Pupil Book provide further practice and challenging questions. You can use them to follow up the activities and deepen the learning.

Focus activities

1. Revising multiplying facts
2. Using multiplying facts
3. Solving problems with multiplying and dividing facts
4. Using factors to solve empty box balancing problems involving multiplying
5. Revising the short written method of multiplying
6. Revising the short written method of dividing
7. Revising finding fractions of amounts using multiplying and dividing facts
8. Multiplying decimals
9. Dividing decimals

© Oxford University Press 2025

Calculating 2: Multiplying and dividing

Key mathematical ideas Multiplying, Dividing, Equivalence, Mathematical thinking and reasoning

Educational context

In this activity group, children consolidate and further develop their skills in multiplying and dividing mentally, and mentally with jottings. The focus is on continuing to build children's fluency and flexibility. In all of this work, children need to be confident with times table facts and have a good understanding of the operations of multiplying and dividing. In addition to the commutative property of multiplying, which children have already encountered extensively, the activities provide opportunities for exploring the distributive and associative properties, and how these can be used to approach multiplying and dividing calculations.

The activity group begins by encouraging children to explore how factors and partitioning can be used to simplify multiplying calculations, then goes on to consider partitioning as an approach to dividing. Children revisit multiplying and dividing by powers of 10 (10, 100 and 1000), then, in the final activity, they explore how some dividing calculations can be simplified.

Learning opportunities

- To recall and use multiplication facts to 12 × 12 fluently when calculating.
- To be able to multiply and divide numbers mentally and with jottings using a range of strategies.
- To use factors to simplify multiplying calculations.
- To use partitioning to simplify multiplying and dividing calculations.
- To consolidate understanding of the relationship between fractions and division.
- To multiply and divide numbers by 10, 100 and 1000 to give answers with up to three decimal places.
- To identify ways of simplifying dividing calculations, including those involving decimals, by multiplying or dividing dividend and divisor.

Terms for children to use

factor, multiple, array, mental method, mental method with jottings, equivalent, equivalence, power of 10, doubling, halving, divisible, dividend, divisor, quotient, decimal point, repeated addition/subtraction, scaling

Assessment opportunities

Look and listen for children who:

- Use the terms for children to use effectively.
- Use an array to describe and explain a multiplying calculation.
- Explain how they carried out a calculation clearly, using mathematical language.
- Can explain, using example calculations, how factors can be used to simplify a multiplying calculation.
- Can explain, using example calculations, how partitioning can be used to simplify a multiplying or dividing calculation.
- Can suggest more than one way of partitioning numbers in order to simplify a multiplying or dividing calculation.
- Reason that if, e.g. 15 of a whole amount is 24 then the whole amount is given by 24 × 5.
- Can describe and explain the effect of multiplying or dividing by 10, 100 or 1000.
- Can simplify a dividing calculation by identifying a suitable common factor by which to multiply or divide dividend and divisor.

NPC Milestone 1

- Use appropriate mental methods to add, subtract, multiply and divide increasingly large numbers (NPC 6:1c)

Explorer Progress Book 6a, pp. 8–9

After completing work on this activity group, give small focus groups of children their Explorer Progress Books and ask them to work through the challenges on the pages. As children complete the pages, assess what progress they are making with the central ideas from the activity group. Refer to the assessment opportunities for assistance.

Explore More Copymaster 8: Sunflowers

After completing work on Activity 4, give children Explore More Copymaster 8: Sunflowers to take home.

Pupil Book 6, pp. 10–13

These pages in the Pupil Book provide further practice and challenging questions. You can use them to follow up the activities and deepen the learning.

Focus activities

1. Using factors and the associative property when multiplying
2. Using the associative and distributive properties when multiplying
3. Using the distributive property when dividing
4. Multiplying and dividing by 10, 100 and 1000
5. Using common factors when dividing

© Oxford University Press 2025

Measurement 1: Statistics, charts and graphs

Key mathematical ideas Invariants, Statistics, Scaling

Educational context

This activity group involves children working with data to calculate the mean, or average, of a set. This allows them to compare different groups of data within the same context, e.g. growing green beans. They move on to looking at estimated values in the context of packaging food, and how the mean is affected by different values in the set. They also consider 'outliers' and how they can skew an average to be higher or lower.

This activity group builds on the work on charts and graphs in the Geometry, Measurement and Statistics 5 Teaching Resource Handbook, Measurement 2.

Later in the activity group, children consider average speed and how to plot distance–time graphs to show speed. They extend this to plotting more data points for distance and time, and discuss how the gradient of the graph shows the speed. These activities develop work in the Number, Pattern and Calculating 6 Teaching Resource Handbook, Pattern and Algebra 2, where children plot graphs showing fuel used and distance travelled, and discuss how this relates to speed.

Children then move on to combining work on angles, fractions and percentages with statistics where children are asked to construct and interpret pie charts. Children are encouraged to compare different methods of displaying data and highlight the usefulness of pie charts when viewing proportions.

In Activities 6–8, children learn about range and the different types of average: mean, mode, median, and that they are useful for different things. They compare the types of average and investigate which is most appropriate in a variety of situations.

Learning opportunities

- To become familiar with the mean as an average of a set of data.
- To know how to calculate the mean (sum of all data divided by the number of data points).
- To work with different units for speed and convert between them (e.g. m/s to km/h).
- To convert between metric and imperial units (kilometres and miles).
- To plot distance–time graphs and understand how they can be used to work out speed.
- To construct and interpret pie charts.
- To understand the differences between the types of average (mean, mode, median) and what they are useful for.

Terms for children to use

data, data set, survey, sample, sample size, value, maximum, minimum, range, spread, statistic, statistician, average, mean, outlier, skewing, central, rate, conversion, speed, metre, kilometre, mile, second, minute, hour, mode, median

Assessment opportunities

Look and listen for children who:

- Use the terms for children to use effectively.
- Calculate the mean from a given data set.
- Choose a suitable type of graph or chart for the purpose of their data set.
- Present, interpret and read data on distance–time graphs.
- Use distance–time graphs to calculate average speed.
- Construct pie charts and bar graphs correctly.
- Choose the most appropriate method for displaying data.
- Understand the differences between the different types of average.
- Know which type of average to use in different contexts.

GMS Milestone 1

- Calculate the mean average of a set of data (GMS 6:1e)
- Create, use and interpret conversion graphs (GMS 6:1f)
- Convert between metric and imperial speeds (GMS 6:1g)
- Construct and interpret pie charts to solve problems (GMS 6:1h)

Explorer Progress Book 6, pp. 2–3

After completing work on this activity group, give small focus groups of children their Explorer Progress Books and ask them to work through the challenges on the pages. As children complete the pages, assess what progress they are making with the central ideas from the activity group. Refer to the assessment opportunities for assistance.

Explore More Copymaster 4: Mean and Keen

After completing work on Activity 3, give children Explore More Copymaster 4: Mean and Keen to take home.

Pupil Book 6, pp. 14–17

These pages in the Pupil Book provide further practice and challenging questions. You can use them to follow up the activities and deepen the learning.

Focus activities

1. Introducing the mean
2. Using the mean
3. Understanding average speed
4. Converting between units of speed
5. Constructing and interpreting pie charts
6. A spoonful of peas
7. Tennis balls
8. A very average game

© Oxford University Press 2025

Numicon 5 Pattern and Algebra 3: Properties of number

Key mathematical ideas Generalizing, Pattern, Mathematical thinking and reasoning

Educational context

These activities rehearse children's knowledge of tables facts through focusing on multiples, factors, and prime and composite numbers. They further build children's multiplicative 'number sense', and also support fluent calculating with fractions, since finding 'lowest common multiples' and 'highest common factors' depends upon being able to recognize factors and multiples quickly. Working systematically is also crucial to this work: it is often important to be able to consider all factor or multiple possibilities in a situation, and knowing that one has 'found all the possibilities' requires a systematic approach.
Finally the important distinction between prime and composite (i.e. non-prime) numbers is introduced formally, with a traditional approach to finding all prime numbers less than 100.
Overall, the aim should be to develop an easy familiarity with factors and multiples of numbers, and to encourage systematic thinking.

Learning opportunities

- To identify multiples and factors, including finding all factor pairs and all the factors for a given number.
- To find the lowest common multiple (LCM) of two or more numbers.
- To find the highest common factor (HCF) of two or more numbers.
- To establish whether a number up to 100 is prime.
- To recall all prime numbers up to 20.

Terms for children to use

multiples, odd, even, digits, divided into equal groups, divided equally, discounted, eliminated, all possibilities, systematic, combinations, strategies, generalize, most, least, common multiples, lowest common multiple, multiply, divides by, divisible, remainders, factors, factor pair, common factor, highest common factor, prime numbers, composite numbers, prime factor, whole number

Assessment opportunities

Look and listen for children who can:
- Use the terms for children to use effectively.
- Explain that a number is a multiple of another if it divides by that number without a remainder.
- Use knowledge of multiples and times table facts flexibly and fluently.
- Work systematically and logically to narrow possibilities and find solutions to a range of problems involving combinations of multiples.
- Use knowledge of multiples and number facts to find the lowest common multiple of two or more numbers.
- Use knowledge of multiples and times table facts flexibly to develop efficient strategies for finding common multiples and record these in different ways.
- Work systematically to find common factors and identify the highest common factor.
- Work systematically to find all the factors of a given number.
- Work systematically to find prime numbers to 100.
- Explain that numbers that have only 1 and themselves as factors are called prime numbers.
- Explain that numbers that have factors other than 1 and themselves are called composite numbers.

NPC Milestone 4

- Find the lowest common multiple of two or more numbers (NPC 5:4a)
- Find the highest common factor of two or more numbers (NPC 5:4b)
- Explain the difference between prime and composite numbers and identify them by testing accordingly (NPC 5:4c)

Explorer Progress Book 5b, pp. 14–15

After completing work on this activity group, give small focus groups of children their Explorer Progress Books and ask them to work through the challenges on the pages. As children complete the pages, assess what progress they are making with the central ideas from the activity group. Refer to the assessment opportunities for assistance.

Explore More Copymaster 4: Finding Factors

After completing work on Activity 4, give children Explore More Copymaster 4: Finding Factors to take home.

Pupil Book 5, pp. 74–77

These pages in the Pupil Book provide further practice and challenging questions. You can use them to follow up the activities and deepen the learning.

Focus activities

1. Guess the multiple
2. Solving problems with combinations of multiples
3. Finding the lowest common multiple of two or more numbers
4. Finding all the factors of a given number
5. Finding common factors, including the highest common factor
6. Prime and composite numbers
7. Finding all prime numbers to 100

© Oxford University Press 2025

Numicon 5 Pattern and Algebra 4: Looking for patterns and generalizing

Key mathematical ideas Generalizing, Pattern, Mathematical thinking and reasoning

Educational context

These activities are essentially about generalizing, first in relation to tests of 'divisibility', e.g. 'A number is divisible by 4 if its last two digits are divisible by 4,' then through extending children's work on number sequences beyond linear sequences to sequences with more complicated term-to-term rules.

The emphasis here is on visualizing such sequences and describing their rules and patterns in visual terms: sequences are presented using apparatus or imagery and children are encouraged to 'say what you see' before using numbers to describe it.

These activities provide a foundation for children's future work on 'global generalizations', which involve writing a 'general term' (or 'formula') for a sequence. At this stage, the most important thing to focus on is visualizing and imagery.

Finally, the visual emphasis is continued in introducing the sequences of 'square' and 'cube' numbers. Here again, the focus should be on discussion and how these numbers 'look', rather than on, for example, the superscript notation (e.g. 4^2). Conventions are important, but at this stage physical action and imagery will help children grasp the 'sense' of what is going on. The understanding gained here will help children in their exploration of area and volume in *the Geometry, Measurement and Statistics 5 Teaching Resource Handbook*, Measurement 3, 4 and 5.

Learning opportunities

- To recognize and use rules of divisibility by 2, 3, 5, and 10.
- To visualize and describe non-linear number sequences using number rods.
- To recognize and use square numbers and cube numbers, and their superscript notation.

Terms for children to use

multiples, factors, divisible by, divided equally, divisibility rules, qualify, disqualify, odd, even, prove, general rule, general statement, generalize, digits, digit sum, systematically, investigate, relationships, term, pattern, growing patterns, relative size, area, difference, sequence, consecutive, length, width, height, area, volume, square, square number, cube, cube number

Assessment opportunities

Look and listen for children who can:

- Use the terms for children to use effectively.
- Use knowledge of factors, multiples and divisibility flexibly and systematically to deduce general rules and explain them clearly.
- Work systematically to explore non-linear sequences to find patterns from which they deduce general rules.
- Explain that when a number is multiplied by itself the product can be called a square number.
- Use and read square number notation, e.g. 5^2.
- Make connections between square numbers and area and the notation used for units of area (e.g. cm^2).
- Explain that when a number is multiplied by itself twice we call this a cube number
- Use and read cube number notation, e.g. 4^3.

NPC Milestone 5

- Know and be able to use simple tests of divisibility (NPC 5:5d)
- Explain what square and cube numbers are (NPC 5:5e)

Explorer Progress Book 5c, pp. 6–7

After completing work on this activity group, give small focus groups of children their Explorer Progress Books and ask them to work through the challenges on the pages. As children complete the pages, assess what progress they are making with the central ideas from the activity group. Refer to the assessment opportunities for assistance.

Explore More Copymaster 5: Window Patterns

After completing work on Activity 3, give children Explore More Copymaster 5: Window Patterns to take home.

Pupil Book 5, pp. 106–109

These pages in the Pupil Book provide further practice and challenging questions. You can use them to follow up the activities and deepen the learning.

Focus activities

1. Testing general statements about factors, multiples and divisibility
2. Writing general rules for number rod designs
3. Writing general rules for growing number rod sequences
4. Generalizing about square numbers
5. Exploring square numbers
6. Generalizing about the factors of square numbers
7. Generalizing about cube numbers

© Oxford University Press 2025

Pattern and Algebra 5: Using equivalence to solve problems

Key mathematical ideas Equivalence, Factors, Non-computational thinking, Mathematical thinking and reasoning

Educational context

This activity group further develops children's understanding of equivalence. They extend earlier work in Pattern and Algebra 2 and 3, where children explored missing number problems and the use of brackets. The activities are designed to encourage children to look carefully at the numbers involved in a calculation and to recognize situations in which they can use non-computational strategies, e.g. adjusting and compensating. The activities also revisit the signs used to express inequalities. Children are encouraged to use strategies for adjusting expressions in balancing number sentences involving all four operations, with some problems set in a measures context.
The activity group further develops children's understanding of the use of brackets, which are used to show the order of calculation for more complex expressions that would otherwise be ambiguous.
Children apply their understanding by working with factors, multiples, and prime, square and cube numbers, using them to construct equivalence statements.

Learning opportunities

• To describe number relationships when comparing expressions in balancing number sentences involving all four operations.
• To have a rich understanding of the equals sign (=) and relate this to understanding of other relationships, including where expressions are less than (<) or greater than (>) other expressions.
• To develop strategies for making calculations easier by adjusting and compensating numbers.
• To develop strategies for solving problems where more than one number is missing.
• To find missing numbers in balancing number sentences involving adding, subtracting and multiplying.
• To know that brackets are used to show the order in which calculations are to be carried out.
• To use a factor tree to identify the prime factors of a number.

Terms for children to use

expressions, relative size, greater than, less than, fewer than, equal, equivalent, adjust, compensate, compensate for the difference, complements, inverse, total, brackets, balancing calculation, factors

Assessment opportunities

Look and listen for children who can:
• Use the terms for children to use effectively.
• Use the <, > and = symbols to compare expressions in balancing number sentences and explain their reasoning.
• Adjust and compensate numbers in balancing number sentences without calculating.
• Explain that symbols can be used to stand for different missing numbers.
• Solve missing number problems using an expanding knowledge of, e.g. complements, doubles, inverses.
• Explain that brackets are used to show the order in which calculations are to be carried out.

NPC Milestone 6

• Explain how to solve missing number problems involving both equivalence and inequality (NPC 5:6f)

Explorer Progress Book 5c, pp. 18–19

After completing work on this activity group, give small focus groups of children their Explorer Progress Books and ask them to work through the challenges on the pages. As children complete the pages, assess what progress they are making with the central ideas from the activity group. Refer to the assessment opportunities for assistance.

Explore More Copymaster 6: Post Office Weigh-in

After completing work on Activity 4, give children Explore More Copymaster 6: Post Office Weigh-in to take home.

Pupil Book 5, pp. 150–153

These pages in the Pupil Book provide further practice and challenging questions. You can use them to follow up the activities and deepen the learning.

Focus activities

1. Using symbols to show inequalities
2. Exploring inequalities with missing numbers
3. Exploring balancing number sentences
4. Finding missing numbers in balancing number sentences
5. Solving problems where symbols stand for unknown numbers
6. Recording with brackets
7. Introducing factor trees

© Oxford University Press 2025

Pattern and Algebra 1: Multiples, factors and primes

Key mathematical ideas Equivalence, Factors, Multiples, Primes, Composite numbers, Non-computational thinking, Mathematical thinking and reasoning

Educational context

The purpose of this activity group is for children to become familiar and fluent with factor and multiple relationships between numbers. This will facilitate their work with numbers more generally, e.g. it can help with carrying out calculations involving fractions, linking to work in Numbers and the Number System 2, or working out 'long' multiplication or division calculations mentally, building on work from Calculating 2.
In particular, the activities introduce the idea of 'prime factorization' and its usefulness when finding lowest common multiples (LCMs) and highest common factors (HCFs).

Learning opportunities

- To identify multiples and factors, including finding all the factors of a given number.
- To identify prime numbers.
- To identify common multiples, including the lowest common multiple (LCM) of two or more numbers.
- To identify common factors, including the highest common factor (HCF) of two or more numbers.

Terms for children to use

multiple, common multiple, lowest common multiple, LCM, factor, factor pair, common factor, highest common factor, HCF, prime, prime number, composite number, prime factor, prime factorization, factor tree

Assessment opportunities

Look and listen for children who:
- Use the terms for children to use effectively.
- Can explain what a multiple and a factor of a number are, giving examples.
- Can explain what a common multiple and a common factor of two or more numbers are, giving examples.
- Can draw a factor tree and write a multiplication calculation to show the prime factors of a number.
- Work systematically to find common multiples and common factors of two or more numbers.
- Use prime factorization to identify the lowest common multiple (LCM) and highest common factor (HCF) of two or more numbers.

NPC Milestone 2

- Identify common factors, common multiples and prime numbers (NPC 6:2a)

Explorer Progress Book 6a, pp. 10–11

After completing work on this activity group, give small focus groups of children their Explorer Progress Books and ask them to work through the challenges on the pages. As children complete the pages, assess what progress they are making with the central ideas from the activity group. Refer to the assessment opportunities for assistance.

Explore More Copymaster 1: Factorize Square

After completing work on Activity 2, give children Explore More Copymaster 1: Factorize Square to take home.

Pupil Book 6, pp. 18–21

These pages in the Pupil Book provide further practice and challenging questions. You can use them to follow up the activities and deepen the learning.

Focus activities

1. Exploring multiples and factors in number chains
2. Exploring prime factors using factor trees
3. Using factorization to help with multiplying and dividing
4. Solving problems by finding the lowest common multiple
5. Finding common factors, including the highest common factor

© Oxford University Press 2025

Numicon 5 Numbers and the Number System 2: Exploring equivalence with fractions

Key mathematical ideas Fractions, Equivalence, Mathematical thinking and reasoning

Educational context

This activity group develops children's existing understanding of equivalent proportions, e.g. one half is also two quarters, three sixths, and so on. It introduces the terms 'proper fraction' and 'improper fraction', and improper fractions and mixed numbers. Conversion between improper fractions and mixed numbers enables children to consider the relationship between fractions and dividing, which they will explore further in Calculating 9. It also gives children a first introduction to the idea of multiplying a fraction and a whole number, e.g $\frac{1}{4} \times 10 = \frac{10}{4} = 5$.

Children approach the idea of equivalent fractions in the practical context of scaling up a recipe, and are then encouraged to explore the numerical relationships involved using structured resources and increasingly abstract mathematical reasoning.

This work is essentially concerned with developing children's communication about proportions and relationships between fractions. Encourage them to discuss and use a variety of imagery and contexts illustrating equivalences, and corresponding forms of fraction notation.

Since communicating is at the heart of these activities, give children plenty of time to discuss and explain their thinking.

Learning opportunities

- To recognize mixed numbers and improper fractions and convert from one form to the other.
- To recognize equivalent proper fractions < 1.
- To generate equivalent proper fractions < 1.

Terms for children to use

part-whole relationship, comparing, equivalent fraction, denominator, numerator, proportion, ordinal number names, for every, in every, unit fraction, proper fraction, improper fraction, mixed number, factor, common factor, multiple, times, divide, equivalence, equivalent to, scale up, scale down, reduce, simplest form

Assessment opportunities

Look and listen for children who can:

- Use the terms for children to use effectively.
- Explain equivalences between improper fractions and mixed numbers.
- Use dividing to convert improper fractions to mixed numbers.
- Use knowledge of factors and multiples to recognize and explain equivalences between proper fractions.
- Use knowledge of multiples and factors to create equivalent fractions and illustrate these with structured apparatus.
- Explain that, when scaling up, proportions need to be constant, so both numerator and denominator are multiplied by the same number.

NPC Milestone 1

- Explain equivalences between improper fractions and mixed numbers (NPC 5:1c)
- Use knowledge of factors and multiples to recognize and explain equivalences between proper fractions (NPC 5:1d)

Explorer Progress Book 5a, pp. 6–7

After completing work on this activity group, give small focus groups of children their Explorer Progress Books and ask them to work through the challenges on the pages. As children complete the pages, assess what progress they are making with the central ideas from the activity group. Refer to the assessment opportunities for assistance.

Explore More Copymaster 9: More, Equal or Less?

After completing work on Activity 5, give children Explore More Copymaster 9: More, Equal or Less? to take home.

Pupil Book 5, pp. 6–9

These pages in the Pupil Book provide further practice and challenging questions. You can use them to follow up the activities and deepen the learning.

Focus activities

1. Introducing improper fractions and mixed numbers – halves
2. Exploring connections between improper fractions and mixed numbers – halves
3. Exploring connections between improper fractions and mixed numbers – quarters
4. Converting mixed numbers to improper fractions
5. Recognizing equivalent fractions
6. Using equivalence to scale recipes up
7. Illustrating equivalence with Numicon Shapes

© Oxford University Press 2025

Numicon 5 Numbers and the Number System 6: Comparing and ordering fractions

Key mathematical ideas Fractions, Equivalence, Ordering, Mathematical thinking and reasoning

Educational context

This activity group develops work from Numbers and the Number System 2 and from the *Number, Pattern and Calculating 4 Teaching Resource Handbook*. Essentially, the activities are about using fractions to describe proportions, recognizing that a variety of equivalent fractions can be used to describe the same proportion, and that proportions expressed as fractions can be ordered. Children are thus using fractions to develop their communicating about proportions, both within specific contexts and more generally. Later, in Calculating 10, children will explore similar activities to help them make connections between proportion and ratio.

At the heart of this work, children are developing ways of recognizing and finding equivalent fractions. They then use these to compare fractions and order them by size. These ideas are both important and challenging. Give children plenty of time and encourage discussion and illustration to help them develop their communicating about fractions and proportions.

Learning opportunities

- To compare and order fractions whose denominators are all multiples of the same number.
- To use < and > signs to record the ordering of fractions.
- To simplify fractions to their lowest terms by finding common factors.
- To use equivalent fractions to scale up or down in context.

Terms for children to use

part-whole relationship, comparing, equivalence, equivalent fractions, denominator, numerator, proportion, 'in every', 'for every', unit fraction, proper fraction, improper fraction, mixed number, factor, common factor, divisible by, multiple, times, divide, scale down, scale up, simplest form, common denominator

Assessment opportunities

Look and listen for children who can:

- Use the terms for children to use effectively.
- Compare fractions whose denominators are multiples of the same number.
- Use knowledge of multiples to find equivalent fractions and illustrate this with structured apparatus.
- Compare fractions and order them using < and > symbols.
- Make connections between scaling up and multiplying, and scaling down and dividing, as inverses.
- Use knowledge of multiples and factors to simplify fractions to their lowest terms.

NPC Milestone 3

- Use knowledge of factors and multiples to find equivalent fractions and to simplify fractions to their lowest terms (NPC 5:3a)
- Compare and order fractions with denominators which are multiples of the same number (NPC 5:3b)

Explorer Progress Book 5b, pp. 4–5

After completing work on this activity group, give small focus groups of children their Explorer Progress Books and ask them to work through the challenges on the pages. As children complete the pages, assess what progress they are making with the central ideas from the activity group. Refer to the assessment opportunities for assistance.

Explore More Copymaster 13: Who Gets More?

After completing work on Activity 3, give children Explore More Copymaster 13: Who Gets More?

Pupil Book 5, pp. 50–53

These pages in the Pupil Book provide further practice and challenging questions. You can use them to follow up the activities and deepen the learning.

Focus activities

1. Comparing and ordering proper fractions whose denominators are multiples of the same number
2. Comparing and ordering proper fractions by finding a common denominator
3. Using greater than and less than signs to record comparisons of fractions
4. Simplifying fractions by finding common factors
5. Simplifying fractions to their lowest terms

© Oxford University Press 2025

Numbers and the Number System 2: Fractions

Key mathematical ideas Fractions, Equivalence, Mathematical thinking and reasoning

Educational context

In this activity group children consolidate and extend their understanding of fractions. They use the technique of finding the lowest common multiple to produce fractions with a common denominator, and so compare and order them. They also use finding the highest common factor of two numbers in order to express fractions in their simplest form. In the final activity, they apply some of these ideas to explore comparing and ordering mixed numbers.

It is therefore important that children have a secure understanding of factors and multiples, as covered in Pattern and Algebra 1, before working on these activities.

Throughout, emphasize the relationship between fractions and proportions, and encourage children to spot patterns and to generalize about equivalent fractions, e.g. given that $\frac{7}{12} = \frac{14}{24}$, both fractions represent the same proportion ('7 out of every 12'), and the numerator and denominator of $\frac{14}{24}$ are both the same multiple (the second) of the numerator and denominator of $\frac{7}{12}$.

Learning opportunities

- To understand, recognize and generate equivalent proper fractions.
- To compare and order fractions and mixed numbers by using the lowest common multiple to express them in the same denomination.
- To use common factors to express fractions in their simplest form.
- To deepen understanding of factors and multiples.

Terms for children to use

fraction, proper fraction, improper fraction, mixed number, whole number, proportion, division, numerator, denominator, equivalent, lowest common multiple, LCM, highest common factor, HCF, prime factor, simplify, simplest form, greater than, less than, ascending, descending

Assessment opportunities

Look and listen for children who:

- Use the terms for children to use effectively.
- Can recognize and generate equivalent fractions, and explain why they are equivalent.
- Notice and can describe patterns within fraction families, e.g. $\frac{1}{4}, \frac{2}{8}, \frac{3}{12}$ …
- Can compare and order fractions and mixed numbers by expressing them in the same denomination, using a common multiple of the denominators.
- Can simplify fractions using common factors.

NPC Milestone 2

- Compare and order fractions by expressing them as equivalent fractions with a common denominator (NPC 6:2b)

Explorer Progress Book 6a, pp. 12–13

After completing work on this activity group, give small focus groups of children their Explorer Progress Books and ask them to work through the challenges on the pages. As children complete the pages, assess what progress they are making with the central ideas from the activity group. Refer to the assessment opportunities for assistance.

Explore More Copymaster 6: Quiz Team Scores

After completing work on Activity 3, give children Explore More Copymaster 6: Quiz Team Scores to take home.

Pupil Book 6, pp. 22–25

These pages in the Pupil Book provide further practice and challenging questions. You can use them to follow up the activities and deepen the learning.

Focus activities

1. Comparing and ordering fractions with different denominators
2. Comparing and ordering proper fractions by finding a common denominator
3. Simplifying fractions
4. Comparing and ordering mixed numbers

© Oxford University Press 2025

Calculating 3: Estimating, rounding and equivalence

Key mathematical ideas Counting, Place value, Equivalence, Mathematical thinking and reasoning

Educational context

This activity group focuses on estimating and rounding while calculating. The activities also offer opportunities to reinforce children's understanding of measurement, in particular their appreciation that all measuring in everyday life is both approximate and purposeful. These two characteristics of measuring lead to the need always to work with measurements that are approximate to a degree that will serve the purposes of a given context and hence to the related activity of estimating and rounding with numbers.

Learning opportunities

- To round whole numbers to a required degree of accuracy, and decimal numbers to the nearest whole number, tenth or hundredth.
- To determine, in the context of a problem, an appropriate degree of accuracy.
- To solve puzzles and problems by estimating answers to calculations.
- To calculate mentally with large numbers and decimals.

Terms for children to use

rough, roughly, near, nearer, nearest, close, closer, closest, about, approximate, approximately, just over, just under, exact, exactly, equivalence, currency, exchange, too many, too few, enough, not enough, round up, round down, rounding, round number, rounded, to the nearest …

Assessment opportunities

Look and listen for children who:

- Use the terms for children to use effectively.
- Can estimate the position of large numbers on a number line and round them to any required degree of accuracy, explaining in terms of place value.
- Choose a degree of accuracy for a calculation appropriate to a problem.
- Explain how rounding the numbers involved in a calculation will affect the answer, e.g. whether it will be an over- or underestimate.
- Can refine their calculations to improve the accuracy of an estimate.

NPC Milestone 2

- Use estimation to check answers to calculations (NPC 6:2c)
- Solve problems which require answers to be rounded to specified degrees of accuracy (NPC 6:2d)

Explorer Progress Book 6a, pp. 14–15

After completing work on this activity group, give small focus groups of children their Explorer Progress Books and ask them to work through the challenges on the pages. As children complete the pages, assess what progress they are making with the central ideas from the activity group. Refer to the assessment opportunities for assistance.

Explore More Copymaster 9: Holiday Money

After completing work on Activity 3, give children Explore More Copymaster 9: Holiday Money to take home.

Pupil Book 6, pp. 26–29

These pages in the Pupil Book provide further practice and challenging questions. You can use them to follow up the activities and deepen the learning.

Focus activities

1. Rounding
2. Using rounding to estimate quantities and costs
3. Using estimating and rounding with currency exchange
4. Using estimating and rounding when scaling up a recipe
5. Estimating costs
6. Using estimating to explore calculations

© Oxford University Press 2025

Calculating 4: Column methods for adding and subtracting

Key mathematical ideas Adding, Subtracting, Place value, Equivalence, Mathematical thinking and reasoning

Educational context

In this activity group children refine their understanding of written column methods for adding and subtracting, drawing on their understanding of place value. The activities build on methods used in the Number, Pattern and Calculating 5 Teaching Resource Handbook while also encouraging exploration and flexibility when calculating, including the introduction of an alternative, 'equal additions' method for subtracting. Children work with both whole numbers and decimals, making use of the contexts of mass and of money to help them calculate with and understand the numbers and methods they are using. The intention is to ensure that children feel confident with a range of methods for adding and subtracting, with the emphasis on formal written methods.

Throughout, encourage them to identify and use different calculation approaches flexibly, and to recognize the value of repeating a calculation by a different method, as a means of checking the answer. The numbers involved can be changed, as needed, in order to challenge children to vary and choose between strategies.

To help children develop fluency, understanding and accuracy in their calculating, take advantage of opportunities to revisit and apply their skills regularly in as wide a variety of contexts as possible. These opportunities might arise within other activity groups in Number, Pattern and Calculating 6 or the Geometry, Measurement and Statistics 6 Teaching Resource Handbook, in other curriculum areas, or as part of homework or additional practice.

Learning opportunities

- To recognize that there are a variety of different methods for adding and subtracting, and to choose appropriately between them in order to carry out and check calculations efficiently.
- To consolidate understanding of column methods for adding and subtracting.
- To use column methods of adding and subtracting confidently and efficiently, including with decimals.
- To use the 'equal additions' method of subtracting.
- To use the inverse relationship between adding and subtracting to check solutions and solve problems.

Terms for children to use

value, worth, place value, column value, quantity value, digit, column, decimal, decimal point, adding, plus, total, sum, subtracting, take away, difference, column method, mental method, jotting, bridging, complements, compensating, adjusting, partitioning, carrying, exchange, grouping, regrouping, redistribution, equal additions, recording, equivalence, balancing calculation, estimating, inverse, inverse operation

Assessment opportunities

Look and listen for children who:

- Use the terms for children to use effectively.
- Accurately give the column and quantity values of the digits in a number or measurement, including those after the decimal point.
- Review the numbers in an adding or subtracting calculation and choose an appropriate method of calculation, giving reasons for their choice.
- Check an adding or subtracting calculation using an appropriate method.
- Draw on known number facts to carry out calculations efficiently.
- Recognize from the numbers in a calculation when redistribution or carrying is needed.
- Add and subtract confidently and accurately with whole numbers and decimals using a written column method.
- Can explain that when the same amount is added to each number in a subtracting calculation ('equal additions') the answer stays the same, and can explain the equal additions method of subtracting in these terms.
- Can explain the inverse relationship between adding and subtracting and use it to solve problems and check calculations.

NPC Milestone 2

- Use column methods of adding and subtracting for larger numbers and decimals (NPC 6:2e)

Explorer Progress Book 6a, pp. 16–17

After completing work on this activity group, give small focus groups of children their Explorer Progress Books and ask them to work through the challenges on the pages. As children complete the pages, assess what progress they are making with the central ideas from the activity group. Refer to the assessment opportunities for assistance.

Explore More Copymaster 10: Balancing Act

After completing work on Activity 3, give children Explore More Copymaster 10: Balancing Act to take home.

Pupil Book 6, pp. 30–33

These pages in the Pupil Book provide further practice and challenging questions. You can use them to follow up the activities and deepen the learning.

Focus activities

1. Using the column method for adding, including decimals
2. Practising subtracting using a column method with redistribution
3. Introducing the column method of subtracting using 'equal additions'
4. Using column methods for adding and subtracting in numerical problem solving

© Oxford University Press 2025

Calculating 5: Percentages

Key mathematical ideas Multiplicative thinking, Equivalence, Fractions, Ratio and proportion, Mathematical thinking and reasoning

Educational context

This activity group focuses on using the language of percentage to describe and calculate proportions of some whole, and on percentage, common fraction and decimal equivalents. Key everyday contexts in which children encounter percentages involve money and measures, e.g. percentage discounts and special offers such as '50% extra free' or '25% bigger'. Other areas of the curriculum, e.g. geography and science, also offer plenty of relevant opportunities.
As children prepare for doing a range of routine calculations in a test environment, see Preparing for Formal Testing 4.

Learning opportunities

- To understand relationships between percentages, fractions and decimals.
- To express a simple proportion as a fraction with denominator 100, and convert it to percentage and decimal equivalents.
- To realize that percentages are useful for comparing proportions where the totals involved vary, e.g. 15 out of 20 and 35 out of 50 are more easily compared if they are expressed as 75% and 70%.
- To understand that percentages are also used as operators, to find quantities which represent particular proportions of a total quantity.
- To calculate simple percentages of quantities and to find new quantities following a percentage increase or decrease.
- To interpret and calculate with data presented in the form of percentages.

Terms for children to use

percentage, per cent, in every, for every, out of, proportion, hundredth, half, quarter, tenth, fraction, decimal, numerator, denominator, equivalent, simplify, discount, less, reduction, money off, more, bigger, extra

Assessment opportunities

Look and listen for children who:
- Use the terms for children to use effectively.
- Can give common fraction, percentage and decimal equivalents, e.g. $\frac{1}{2}$ = 50% = 0·5, $\frac{1}{10}$ = 10% = 0·1.
- Can explain how to convert between fractions, percentages and decimals with reference to expressing proportions 'out of 100'.
- Can explain that quantities can be compared as proportions (that is, without calculating the actual quantities) provided the total quantity is the same for each proportion.
- Can explain that proportions of different total quantities can be compared by expressing them 'out of' the same number, e.g. as percentages.
- Calculate simple percentages of quantities by using their relationship to equivalent fractions and dividing, e.g. calculate 50% as $\frac{1}{2}$ of a quantity by halving, 20% as $\frac{1}{5}$ by dividing by 5, 10% as $\frac{1}{10}$ by dividing by 10, 1% as $\frac{1}{100}$ by dividing by 100.
- Calculate other percentages of quantities based on their relationship to simple percentages, e.g. calculate 30% of a quantity by finding 10% then multiplying this quantity by 3, 6% by finding 5% and 1% and adding these quantities together.
- Can explain, following an increase or decrease, whether a quantity is greater or less than 100% of the original quantity, e.g. that following a 5% increase the new quantity is 105% of the original, or that following a 5% decrease it is 95% of the original.
- Can explain what data presented in the form of percentages shows.

NPC Milestone 2

- Understand, recall and use equivalences between simple fractions, decimals and percentages (NPC 6:2f)

Explorer Progress Book 6a, pp. 18–19

After completing work on this activity group, give small focus groups of children their Explorer Progress Books and ask them to work through the challenges on the pages. As children complete the pages, assess what progress they are making with the central ideas from the activity group. Refer to the assessment opportunities for assistance.

Explore More Copymaster 11: Supermarket Offers

After completing work on Activity 3, give children Explore More Copymaster 11: Supermarket Offers to take home.

Pupil Book 6, pp. 34–37

These pages in the Pupil Book provide further practice and challenging questions. You can use them to follow up the activities and deepen the learning.

Focus activities

1. Making connections between fractions, decimals and percentages
2. Using percentages to compare scores
3. Calculating simple percentage increases
4. Calculating simple percentage decreases
5. Exploring data involving percentages

© Oxford University Press 2025

Geometry 1: 2D shapes and angles

Key mathematical ideas Angle, Rotation, Statistics, Communicating

Educational context

In this activity group children will be given the opportunity to build on their work from Geometry, Measurement and Statistics 5 Teaching Resource Handbook, Geometry 1 and 3, to explore the angle properties of polygons. They are reminded of the idea of interior and exterior angles, and have the opportunity to explore the sums of these angles to establish that, for example, the exterior angles of any polygon add up to 360° and the interior angles of any triangle add up to 180°.

They will be introduced to the concept of vertically opposite angles and use their growing understanding of angle relationships to solve 'missing angle' problems.

The activities allow children to develop their work on the properties of triangles and quadrilaterals. They are asked to follow instructions to draw different shapes and are encouraged first to visualize the results and make predictions. It is important to allow them plenty of time to think about, share and discuss the ideas involved, and to encourage them to make full use of available resources and persist in their explorations.

Learning opportunities

- To draw 2D shapes using given dimensions and angles.
- To compare and classify geometric shapes based on their properties and sizes.
- To identify angles that meet at a point, are on a straight line, or are vertically opposite.
- To calculate missing angles.
- To calculate unknown angles in any triangles, quadrilaterals, and regular polygons.

Terms for children to use

turn, angle, degree, clockwise, anticlockwise, vertically opposite angles, supplementary angles, equilateral triangle, scalene triangle, isosceles triangle, perimeter, quadrilateral, midpoint, bisect, dissect, diagonals, names of quadrilaterals, e.g. squares, oblongs, parallelograms, rhombuses, trapeziums, kites

Assessment opportunities

Look and listen for children who:

- Use the terms for children to use effectively.
- Explain that the equal angles in an isosceles triangle are opposite the equal sides, and that the smallest angle is opposite the shortest side.
- Explain that the opposite sides of a parallelogram must be equal in length for both pairs to be parallel, and that opposite angles in a parallelogram are equal.
- Illustrate the properties of 2D shapes by adding symbols and labels to diagrams, e.g. with 'single' or 'double' angle symbols, or the conventional symbols for parallel lines.
- Use their knowledge that vertically opposite angles are equal to find missing angles.

GMS Milestone 1

- Use formal notation to denote parallel, perpendicular and equal length lines in geometric diagrams (GMS 6:1a)
- Recognize and classify a wide range of 2D shapes based on their properties (GMS 6:1b)
- Calculate missing angles in polygons, along straight lines, around a point and that are vertically opposite (GMS 6:1c)
- Construct triangles and other polygons from given properties (GMS 6:1d)

Explorer Progress Book 6, pp. 4–5

After completing work on this activity group, give small focus groups of children their Explorer Progress Books and ask them to work through the challenges on the pages. As children complete the pages, assess what progress they are making with the central ideas from the activity group. Refer to the assessment opportunities for assistance.

Explore More Copymaster 1: Parallelogram Challenge

After completing work on Activity 3, give children Explore More Copymaster 1: Parallelogram Challenge to take home.

Pupil Book 6, pp. 38–41

These pages in the Pupil Book provide further practice and challenging questions. You can use them to follow up the activities and deepen the learning.

Focus activities

1. Constructing triangles
2. Exploring triangles
3. Exploring quadrilaterals
4. Exploring angles in regular polygons
5. Finding missing angles – introducing vertically opposite angles

© Oxford University Press 2025

Calculating 6: Exploring calculations: multi-step non-routine problems and order of operations

Key mathematical ideas Adding, Subtracting, Multiplying, Dividing, Equivalence, Mathematical thinking and reasoning

Educational context

In this activity group children use their knowledge and understanding of the four operations to solve multi-step non- routine problems involving large numbers and to explore the BODMAS conventional order of tackling operations in multi- operation expressions. They encounter a range of problems designed to encourage them to draw on their problem-solving and calculating skills to make decisions for themselves, both about strategy – that is, choosing which steps to take and which calculations to carry out – and about methods – in particular whether to calculate mentally or with jottings, or to use a formal written method or calculator. As part of this work they are asked to apply their knowledge of a range of mathematical ideas, including fractions, decimals and percentages, ratio and proportion, rounding and estimating, and area.

Children also have the opportunity in this activity group to investigate the effect of order of operations on the results of calculations. In this context they are introduced to the conventional BODMAS rules which enable us to determine that the result of the calculation written as '5 + 3 × 4' (for example) is conventionally 17, rather than 32. They demonstrate that some calculators do not follow this convention and need to be used with care.

Before starting the activity group, it is important that children are fluent in recalling and using number facts and comfortable with a variety of methods of calculating. Throughout, encourage them to try out different problem-solving approaches for themselves, and to consider a variety of strategies and methods for calculating and verifying solutions; allow plenty of time for discussion. The activity group works as a whole, so it is also important that children carry out Activity 1 before Activities 2 and 3 as the following activities use information from work in Activity 1.

Learning opportunities

- To choose appropriate strategies and methods of calculating in order to solve multi-step problems.
- To appreciate the need to work systematically when solving multi-step problems.
- To understand the importance of checking that solutions make sense and are accurate.
- To understand and be able to apply the conventional rules for the order of operations to carry out calculations involving more than one operation, brackets and square or cube numbers, e.g. (2 + 6) × (32 – 12) = 160.
- To understand that some calculators do not follow the rules for the order of operations.

Terms for children to use

problem solving, strategy, method, estimating, rounding, inverse, mental/written calculating method, costs, overheads, income, profit, loss, average, predicted, operation, order of operations, squaring, cubing, powers

Assessment opportunities

Look and listen for children who:

- Use the terms for children to use effectively.
- Make reasoned decisions about strategy and work systematically to solve multi-step problems.
- Identify the calculations needed to solve multi-step problems.
- Calculate efficiently using appropriate mental or written strategies.
- Use estimating to check that the results of calculations are reasonable.
- Use the inverse calculation to check that an answer is correct.
- Use knowledge of the conventional order of operations to carry out calculations involving more than one operation, also square and cube numbers.
- Know that brackets can be used to indicate that part of a calculation should be carried out first.

NPC Milestone 3

- Use the BODMAS convention for order of operations to solve problems (NPC 6:3a)

Explorer Progress Book 6a, pp. 20–23

After completing work on this activity group, give small focus groups of children their Explorer Progress Books and ask them to work through the challenges on the pages. As children complete the pages, assess what progress they are making with the central ideas from the activity group. Refer to the assessment opportunities for assistance.

Children will also have the opportunity to complete their Learning Log (pp. 22–23) where they can reflect on the mathematics they have done so far.

Explore More Copymaster 12: Which Order?

After completing work on Activity 3, give children Explore More Copymaster 12: Which Order? to take home.

Pupil Book 6, pp. 42–45

These pages in the Pupil Book provide further practice and challenging questions. You can use them to follow up the activities and deepen the learning.

Focus activities

1. Solving multi-step problems
2. More multi-step problems
3. Introducing the BODMAS convention for the order of operations
4. Exploring the order of operations
5. Using the BODMAS convention order of operations to solve problems

© Oxford University Press 2025

Calculating 7: Ratio and proportion

Key mathematical ideas Fractions, Equivalence, Order, Ratio, Multiplicative thinking, Dimension, Mathematical thinking and reasoning

Educational context

The aim of this activity group is to encourage children to reason about, manipulate and calculate confidently with ratios and proportions, and also to introduce the conventional ratio notation of *a*:*b*. The work also draws on and promotes children's problem-solving more generally, with tasks which require them to understand and make use of their understanding of ratio and proportion in a variety of contexts. It is important that children are able to distinguish between ratio and proportion. Their use of visual and physical illustration is crucial here: encourage them throughout to explore the different ways in which they can represent part-to- part and part-to-whole relationships, using apparatus and imagery of their choice. In Activities 1 and 3, the use of ratio and proportion in relation to physical (spatial) dimensions requires careful illustration. In Activity 4 a pie chart provides a key illustration of proportions that remain constant within a varying 'whole' which is central to children's introduction to the idea of a statistical sample.

Learning opportunities

- To identify ratios and record them using conventional notation, e.g. 1:2.
- To identify proportions and express them as fractions or percentages.
- To solve problems involving ratio and proportion using integer multiplying and dividing facts.
- To solve scaling problems involving similar shapes.
- To solve problems involving unequal sharing.

Terms for children to use

ratio, proportion, … in every … , … for every … , … to every … , equivalent, in proportion, out of proportion, part, part-to part relationship, part-to-whole relationship, rate, per, shape, similar, congruent, dimensions, scale, scale up, scale down, scale factor, equivalent fractions, simplify

Assessment opportunities

Look and listen for children who:
- Use the terms for children to use effectively.
- Can describe and explain patterns and relationships when exploring ratios and proportions.
- Can describe a relationship in terms both of ratio and proportion, e.g. 'the ratio of green to blue cubes is two to one', 'two out of every three cubes are green'.
- Read and express equivalent ratios, e.g. 4:2 and 2:1, by identifying common factors.
- Apply their knowledge of multiplying and dividing facts to solve problems involving scaling, similar shapes and unequal sharing.
- Can explain in simple terms how survey data can be used to draw conclusions or make predictions.

NPC Milestone 3

- Solve problems involving unequal sharing and grouping using knowledge of fractions and multiples (NPC 6:3c)
- Recognize proportionality in contexts when the relations between quantities are in the same ratio (NPC 6:3d)

Explorer Progress Book 6b, pp. 2–3

After completing work on this activity group, give small focus groups of children their Explorer Progress Books and ask them to work through the challenges on the pages. As children complete the pages, assess what progress they are making with the central ideas from the activity group. Refer to the assessment opportunities for assistance.

Explore More Copymaster 13: Making Medicines

After completing work on Activity 2, give children Explore More Copymaster 13: Making Medicines to take home.

Pupil Book 6, pp. 46–49

These pages in the Pupil Book provide further practice and challenging questions. You can use them to follow up the activities and deepen the learning.

Focus activities

1. Exploring ratio and proportion
2. Solving problems using ratio and proportion
3. Solving geometric scaling problems
4. Making use of data
5. Solving problems involving unequal sharing

© Oxford University Press 2025

Measurement 2: Areas of 2D shapes

Key mathematical ideas Transformation, Rotation, Reflection, Area, Communicating

Educational context

The activities in this activity group build on work with triangles and quadrilaterals from Geometry, Measurement and Statistics 6 Teaching Resource Handbook, Geometry 1. They also extend the work on area from Geometry, Measurement and Statistics 5 Teaching Resource Handbook, Measurement 3 and 5 to calculate the areas of triangles and parallelograms. In addition, children can consolidate learning about transformations from Geometry, Measurement and Statistics 5 Teaching Resource Handbook, Geometry 3.
In each activity, children are encouraged to describe the properties of each 2D shape and generalize about their findings. Children are guided to summarize the relationships they investigate, leading them to understand where it is possible to use a formula to calculate the area of shapes. They then put the formula to use in solving practical problems.

Learning opportunities

• To describe the movements of shapes using the language of transformations.
• To compare and classify geometric shapes based on their properties and sizes.
• To calculate the areas of parallelograms and triangles.
• To recognize that shapes with the same areas can have different perimeters and vice versa.
• To find the areas of composite shapes.
• To recognize when it is possible to use formulae for calculating the areas of shapes.

Terms for children to use

reflection, rotation, translation, enlargement, similar, congruent, parallel, perpendicular, side, vertex, vertices, angle, diagonal, midpoint, dimensions, length, width, height, base, altitude, area, conservation of area, dissection, formula, area of a triangle equals half base times height, area of a parallelogram equals base times height, composite shape, units of area (e.g. square inch, square mile, square millimetre)

Assessment opportunities

Look and listen for children who:
• Use the terms for children to use effectively.
• Describe the transformations they use to construct shapes.
• Suggest splitting shapes into two or more smaller shapes to find and total their areas.
• Can show how different shapes may have the same area.
• Explain that whichever base and height pair in a triangle they choose to use, the formula will result in the same area.
• Estimate to help them predict and check their results.

GMS Milestone 2

• Use formulae to find the area of triangles (area $=\frac{1}{2} \times b \times h$) and parallelograms (area $= b \times h$) and understand why they work (GMS 6:2a)
• Find the area of composite shapes by partitioning into triangles and/or rectangles (GMS 6:2b)

Explorer Progress Book 6, pp. 6–7

After completing work on this activity group, give small focus groups of children their Explorer Progress Books and ask them to work through the challenges on the pages. As children complete the pages, assess what progress they are making with the central ideas from the activity group. Refer to the assessment opportunities for assistance.

Explore More Copymaster 5: Triangle Area Match

After completing work on Activity 3, give children Explore More Copymaster 5: Triangle Area Match to take home.

Pupil Book 6, pp. 50–53

These pages in the Pupil Book provide further practice and challenging questions. You can use them to follow up the activities and deepen the learning.

Focus activities

1. Using tangrams to explore conservation of area and dissection of shapes
2. Finding the area of a right-angled triangle
3. Finding the area of any triangle
4. Finding the area of a parallelogram
5. Solving problems by finding the area of composite shapes

© Oxford University Press 2025

Calculating 8: Converting fractions and decimals

Key mathematical ideas Equivalence, Fractions, Place value, Decimals, Multiplicative thinking, Mathematical thinking and reasoning

Educational context

This activity group is designed to deepen children's understanding of fractions and provide them with the opportunity to discover and explore common fraction and decimal equivalents. The activities build on children's previous work on finding fractions of a whole and fractions of a set, as well as the relationship between fractions and division.

The activity group begins with children exploring real- life scenarios of using fractions as a division process, that is, that 35 is equivalent to 3 ÷ 5. The activities then progress to enable children to develop an understanding of how to convert any fraction into a decimal using division and their knowledge of equivalent fractions. In the final activity children have the opportunity to use this knowledge and understanding to calculate with fractions and decimal fractions.

Success with this work requires children to have an understanding of decimal place value, including rounding and a range of strategies to divide. Children will also need to be confident in adding and subtracting decimals.

The activities make links with measures and children need to be secure with converting standard units of measure.

As children prepare for doing a range of routine calculations in a test environment, see Preparing for Formal Testing 4.

Learning opportunities

- To associate fractions with division and use this relationship to calculate decimal equivalents of common fractions.
- To recall common fraction and decimal fraction equivalents.
- To understand that common fractions have either terminating or recurring decimal equivalents.
- To add fractions by converting them to decimal equivalents.
- To understand the equivalence relations between fractions.
- To convert between common units of measurement.
- To develop understanding of decimal place value and multiplying and dividing by 1000.
- To consolidate rounding skills and round to a given number of decimal places.

Terms for children to use

common fraction, proper fraction, numerator, denominator, decimal fraction, decimal, decimal point, decimal place, terminating/recurring/repeating decimal, divide, share equally, equal parts, whole, equivalent, measurement, unit, estimate, approximation, accurate, precise, convert, round

Assessment opportunities

Look and listen for children who:

- Use the terms for children to use effectively.
- Demonstrate and explain an understanding of fractions as the result of dividing a whole into equal parts.
- Notice the relationship of equivalence between, e.g. fifths and tenths, and use this to identify decimal equivalents.
- Recognize that the decimal equivalent of a common fraction can be calculated by dividing the numerator by the denominator, e.g. 25 = 2 ÷ 5.
- Recognize that the decimal equivalent of a non-unit fraction (e.g. 25) can be calculated by multiplying the unit fraction decimal equivalent, e.g. as 15 = 0·2 then 25 = 0·2 × 2.
- Make sensible conjectures about decimal fraction equivalents of common fractions.
- Notice that the decimal equivalents of some common fractions contain recurring patterns of digits.
- Use efficient dividing strategies.
- Demonstrate an understanding of place value when calculating.
- Can recall an increasing range of common fraction and decimal fraction equivalents.

NPC Milestone 3

- Convert simple fractions to decimal fractions by dividing (NPC 6:3e)

Explorer Progress Book 6b, pp. 4–5

After completing work on this activity group, give small focus groups of children their Explorer Progress Books and ask them to work through the challenges on the pages. As children complete the pages, assess what progress they are making with the central ideas from the activity group. Refer to the assessment opportunities for assistance.

Explore More Copymaster 14: Birdseed

After completing work on Activity 3, give children Explore More Copymaster 14: Birdseed to take home.

Pupil Book 6, pp. 54–57

These pages in the Pupil Book provide further practice and challenging questions. You can use them to follow up the activities and deepen the learning.

Focus activities

1. Exploring the relationship between common fractions and dividing
2. Making connections between fractions and decimals – fifths
3. Making connections between fractions and decimals – eighths
4. Making connections between fractions and decimals – recurring decimals
5. Adding fraction and decimal equivalents

© Oxford University Press 2025

Pattern and Algebra 2: Exploring number sequences and relationships

Key mathematical ideas Generalizing, Pattern, Function, Mathematical thinking and reasoning

Educational context

This activity group explores a variety of different types of number sequences, with the aim of encouraging children to think about number relationships carefully and to be prepared to consider many different ways of generating sequences. This lays important foundations for children's later exploration of functions (although that term is not used here).
Of particular importance at this stage are linear number sequences and their graphical illustration as straight lines. There are strong connections with work on line graphs in the Geometry, Measurement and Statistics 5 and 6 Teaching Resource Handbooks, and this is picked up in Activity 1, where children are asked to use a line graph to 'interpolate' values.
As children explore the various sequences, encourage them to generalize and to show and describe the number relationships they find by emphasizing both illustration and algebraic expression of these relationships. In particular, encourage them to identify and consider the connections between the term- to-term rule for a sequence and the global rule or 'formula' which can be used to describe any term.

Learning opportunities

- To generate and describe number sequences, including linear number sequences.
- To link a simple rate with a linear number sequence, formula and line graph.
- To investigate and explain relationships in number sequences and puzzles.
- To express general relationships and rules for number sequences algebraically.

Terms for children to use

sequence, term, term-to-term rule, global/general rule, constant difference, interval, step, formula, expression, equation, equivalent, algebra, algebraic, rate, line graph, linear, straight line, slope, gradient, ordinal number words (e.g. first, second, third), initial term, repeat, cycle, proof, square number, squaring, general rule, nth term

Assessment opportunities

Look and listen for children who:
- Use the terms for children to use effectively.
- Identify and use a constant difference to continue a linear sequence.
- Draw a line graph to illustrate a linear relationship between variables.
- Explain how a constant difference in a linear sequence relates to a line graph for the sequence.
- Can describe and begin to explain relationships in the digits or terms of a number sequence.
- Work systematically to explore number sequences and find patterns from which they can identify general rules.
- Can write a general rule for finding any term in a number sequence by using letters to stand for numbers.
-

NPC Milestone 3

- Generate and describe linear number sequences including expressing term to term and general rules of number patterns (NPC 6:3b)

Explorer Progress Book 6b, pp. 6–7

After completing work on this activity group, give small focus groups of children their Explorer Progress Books and ask them to work through the challenges on the pages. As children complete the pages, assess what progress they are making with the central ideas from the activity group. Refer to the assessment opportunities for assistance.

Explore More Copymaster 2: Number Chain Detective

After completing work on Activity 3, give children Explore More Copymaster 2 Number Chain Detective to take home

Pupil Book 6, pp. 58–61

These pages in the Pupil Book provide further practice and challenging questions. You can use them to follow up the activities and deepen the learning.

Focus activities

1. Exploring links between linear sequences, rates and straight-line graphs
2. Exploring patterns in decimal number sequences
3. Investigating number chains
4. Investigating arrow diagrams
5. Describing growing patterns with algebra

© Oxford University Press 2025

Measurement 3: 3D shapes – nets and surface area

Key mathematical ideas Area, Communicating, Angle, Working in 2D and 3D

Educational context

This group of activities introduces children to nets, with the focus being on helping the children to visualize and illustrate how the 2D net and 3D shape relate to one another. They examine nets of regular and non-regular 3D polyhedra. Activity 3 then enables children to put their knowledge of nets to work to solve a practical problem. This activity group builds on the work on angles from Geometry, Measurement and Statistics 5 Teaching Resource Handbook, Geometry 3, Activities 4–5. The work on surface area builds on Geometry, Measurement and Statistics 5 Teaching Resource Handbook, Measurement 5, Activity 2, Step 6.

Learning opportunities

- To recognize, describe and build simple 3D shapes.
- To make nets for 3D shapes.
- To explore how many nets are possible for different 3D shapes.
- To recognize some properties of the five Platonic solids.
- To calculate the surface area of 3D shapes.
- To convert between standard units, converting measurements of length and volume from a smaller unit of measure to a larger unit, and vice versa, using decimal notation to up to three decimal places.

Terms for children to use

2D, 3D, similar, congruent, reflection, rotation, face, edge, vertex, vertices, dimensions, length, width, breadth, height, net, polygon, polyhedron, regular polygon, regular polyhedron, tetrahedron, cube, octahedron, dodecahedron, icosahedron, surface area, cuboid, pyramid, prism, Platonic solid

Assessment opportunities

Look and listen for children who:

- Use the terms for children to use effectively.
- Explain and illustrate how a 2D net and 3D shape relate.
- Systematically explore all options for creating nets.
- Can convert between standard units of 1, 2 or 3 dimensions, e.g. length, area and volume.

GMS Milestone 2

- Recognize and create nets of cubes (GMS6:2c)
- Create nets of cuboids and prisms (GMS6:2d)
- Use nets to calculate surface area (GMS6:2e)

Explorer Progress Book 6, pp. 8–9

After completing work on this activity group, give small focus groups of children their Explorer Progress Books and ask them to work through the challenges on the pages. As children complete the pages, assess what progress they are making with the central ideas from the activity group. Refer to the assessment opportunities for assistance.

Explore More Copymaster 6: Which Box?

After completing work on Activity 2, give children Explore More Copymaster 6: Which Box? to take home.

Pupil Book 6, pp. 62–65

These pages in the Pupil Book provide further practice and challenging questions. You can use them to follow up the activities and deepen the learning.

Focus activities

1. Introducing nets – finding nets of a cube
2. Investigating nets and regular and irregular polyhedra
3. Solving problems involving surface area and nets

© Oxford University Press 2025

Calculating 9: Written column methods of multiplying

Key mathematical ideas Multiplying, Place value, Inverse, Equivalence, Mathematical thinking and reasoning

Educational context

In this activity group children build on their knowledge and understanding of multiplication to solve problems. They continue to practise formal written methods of short and long multiplication, consolidating the skills learned in the Number, Pattern and Calculating 4 and 5 Teaching Resource Handbooks, and developing them further through work with larger numbers and decimals. In the final activity, children apply these skills in order to solve missing number problems that require them to reason mathematically and work systematically.

Support children by providing regular opportunities for review and practice of related basic skills and ideas, in particular times tables facts, place value and multiplying and dividing by powers of 10. Throughout, emphasize the importance of estimating before calculating as a means of predicting and checking the reasonableness of answers.

As children prepare for doing a range of routine calculations in a test environment, see Preparing for Formal Testing 3, Activities 2 and 4.

Learning opportunities

- To consolidate and deepen understanding of place value, to at least three decimal places.
- To multiply and divide by powers of 10 fluently, understanding the effect in terms of place value.
- To use the short written method for multiplying, including for calculations involving large numbers and decimals.
- To use the long written method for multiplying (up to 4-digits × 2-digits), including for calculations involving decimals.
- To use rounding and estimating skills to predict and check the reasonableness of the results of multiplying calculations.
- To understand when and how to use multiplying to solve problems in a range of contexts, including measures.

Terms for children to use

multiply, multiplication, times, lots of, multiplying sentence, short method, long method, written method, mental method, estimating, rounding, nearest, predict, check, place value, digit, column value, quantity value, decimal point, decimal fraction, decimal number, whole number, partitioning, carrying, grouping, regrouping, names of units of measure and money (e.g. litre, kilogram, pounds, pence)

Assessment opportunities

Look and listen for children who:

- Use the terms for children to use effectively.
- Use rounding skills and knowledge of multiplying facts to give sensible estimates of the answers to multiplying calculations.
- Use understanding of place value to help multiply with decimal numbers.
- Accurately multiply whole and decimal numbers by 1-digit numbers using the short written method of multiplying.
- Accurately multiply whole and decimal numbers by 2-digit numbers using the long written method of multiplying.
- Can describe and explain the steps involved in carrying out a multiplying calculation using the long written method.
- Can identify and explain errors in multiplying calculations.

NPC Milestone 4

- Use short and long multiplying and dividing to solve problems, including those involving decimals (NPC 6:4a)

Explorer Progress Book 6b, pp. 8–9

After completing work on this activity group, give small focus groups of children their Explorer Progress Books and ask them to work through the challenges on the pages. As children complete the pages, assess what progress they are making with the central ideas from the activity group. Refer to the assessment opportunities for assistance.

Explore More Copymaster 15: Ticket Sales

After completing work on Activity 3, give children Explore More Copymaster 15: Ticket Sales to take home.

Pupil Book 6, pp. 66–69

These pages in the Pupil Book provide further practice and challenging questions. You can use them to follow up the activities and deepen the learning.

Focus activities

1. Multiplying large numbers using the short written method
2. Multiplying decimals using the short written method
3. Understanding and practising long multiplication (HTO × TO, ThHTO × TO)
4. Multiplying decimals using long multiplication
5. Using understanding of long multiplication in problem solving

© Oxford University Press 2025

Calculating 10: Introducing long written methods of dividing

Key mathematical ideas Dividing, Place value, Fractions, Decimals, Mathematical thinking and reasoning

Educational context

This activity group focuses on formal written methods of dividing. Children begin by considering two different ways of understanding division: sharing (partition, or finding how many in each of a given number of parts) and grouping (quotition, or finding how many parts of a given size; this involves repeated subtracting, or the method formerly known as 'chunking'). As part of this they make links to their work in Calculating 8 on converting fractions to decimals by dividing.

Children review the short written method of dividing – recalling work in the Number, Pattern and Calculating 5 Teaching Resource Handbook – to divide whole numbers with up to 4 digits by whole numbers with up to 2 digits within their times table facts (that is, ThHTU ÷ TU where TU is 11 or 12). Where there is a remainder, they consider whether to round the result up or down based on the problem context.

They are also introduced to two long written methods of dividing as ways of approaching more demanding calculations involving 2- digit divisors for which they cannot easily recall multiplying facts. These methods reflect the sharing and grouping structures, respectively, and the emphasis here is on understanding how they work, with children being encouraged to develop mental 'patters' which explain the steps involved. Children extend their understanding of remainders to these more complex calculations, interpreting the context in order to determine whether to express remainders as whole numbers, fractions or decimals. The final activity focuses on dividing decimals by whole numbers.

To help ensure their success in this activity group, children should have a thorough knowledge of times tables and a secure understanding of place value. Throughout, encourage them to use the apparatus and imagery of their choice to support their thinking and discussion. Also help them to recognize the usefulness of estimating as a way of checking their results are reasonable and of using the inverse operation to provide an exact check.

As children prepare for doing long division in a test environment, see Preparing for Formal Testing 3, Activity 1.

Learning opportunities

- To consolidate understanding of the short method of dividing and extend it to carry out calculating with 2- digit divisors, e.g. 11, 25.
- To use two long written methods of dividing.
- To be able to choose between short and long methods of dividing, as appropriate.
- To interpret remainders appropriately according to the context, rounding up or down or expressing the remainder as a fraction or decimal.
- To use estimating and inverse calculating to check dividing.

Terms for children to use

short/long method of dividing, sharing, grouping, place value, digit, partition, exchange, inverse, estimate, round, remainder, fraction, decimal, common factor, simplify, simplest form, dividend, divisor, product, multiple, factor

Assessment opportunities

Look and listen for children who:

- Use the terms for children to use effectively.
- Use the short method of dividing to solve problems efficiently.
- Use the two long methods of dividing, explaining steps clearly.
- Explain/describe dividing in terms of the sharing or grouping structure (as appropriate).
- Review numbers when dividing to decide whether to use the short or long (or a mental) method.
- Use estimating to predict and check the reasonableness of the results of dividing.
- Identify the inverse of dividing and use it to check answers.
- Interpret a remainder correctly according to the context, rounding the result up or down or expressing the remainder as a fraction or decimal.
- Use understanding of common factors to express a remainder as a fraction in its simplest form.
- Continue the short or long method of dividing beyond the decimal point, to express a remainder as a decimal fraction.
- Divide decimals by whole numbers using the short and long methods of dividing.

NPC Milestone 4

- Use short and long multiplying and dividing to solve problems, including those involving decimals (NPC6:4a)

Explorer Progress Book 6b, pp. 10–11

After completing work on this activity group, give small focus groups of children their Explorer Progress Books and ask them to work through the challenges on the pages. As children complete the pages, assess what progress they are making with the central ideas from the activity group. Refer to the assessment opportunities for assistance.

Explore More Copymaster 16: Grouping

After completing work on Activity 4, give children Explore More Copymaster 16: Grouping to take home.

Pupil Book 6, pp. 70–73

These pages in the Pupil Book provide further practice and challenging questions. You can use them to follow up the activities and deepen the learning.

Focus activities

1. Dividing in context – the sharing and grouping structures
2. Introducing the long written method of dividing – sharing structure
3. Introducing the long written method of dividing – grouping structure
4. Developing the long written method of dividing for grouping
5. Developing the long written method of dividing for sharing, and expressing remainders as fractions when sharing or grouping
6. Expressing remainders as decimals when sharing or grouping
7. Dividing decimals by whole numbers

© Oxford University Press 2025

Measurement 4: Volume and scaling

Key mathematical ideas Length, Area, Volume and capacity, Working in 2D and 3D, Scaling

Educational context

This activity group builds on the work on capacity and volume from the Geometry, Measurement and Statistics 4 Teaching Resource Handbook, Measurement 5, and extends the work on solid and liquid volume from Geometry, Measurement and Statistics 5 Teaching Resource Handbook, Measurement 4.

As with the work on area in Geometry, Measurement and Statistics 6, Measurement 2, children are encouraged to discover a formula for calculating volume, which they then put to use in solving practical problems.

In Geometry, Measurement and Statistics 5 Teaching Resource Handbook, Measurement 4, Activity 4, children developed an understanding of the equivalence between cubic centimetres and millilitres and converted between millilitres or litres and cubic centimetres. They can use this understanding for the work with cubic millimetres, metres and kilometres in this activity group.

The later activities continue work with scaling, and the effect of scaling on length and area. For support with identifying equivalent ratios, refer to the Number, Pattern and Calculating 6 Teaching Resource Handbook, Calculating 7.

The work in this activity group is demanding with plenty of hard thinking for children. Allow plenty of time for discussion and reflection.

Learning opportunities

- To calculate, estimate and compare the volumes of cubes and cuboids using standard units, including cubic centimetres (cm^3) and cubic metres (m^3), and extending to other units, e.g. mm^3 and km^3.
- To explore and relate different units of volume.
- To recognize when it is possible to use formulae to calculate volumes of shapes.
- To solve problems involving calculating with, and converting between, units of measure and using decimal notation up to three decimal places.
- To investigate the effect of scaling on the lengths, surface areas and volumes of shapes.

Terms for children to use

length, millimetres, centimetres, metres, kilometres, area, square millimetres/centimetres/metres/kilometres, volume, cubic millimetres/centimetres/metres, cubic kilometres, millilitres, litres, dimensions, one-/two-/three-dimensional, width, height, formula, equation, orientation, square/cube numbers, scale, scale factor, enlarge, reduce, ratio, proportion

Assessment opportunities

Look and listen for children who:

- Use the terms for children to use effectively.
- Can explain how to calculate the volume of a cuboid and that the three dimensions can be multiplied in any order.
- Know that 1 cm^3 is a measurement of solid volume and is equal to 1 ml, the liquid volume equivalent.
- Can compile a list of equivalences for metric units of length, area and volume.

GMS Milestone 3

- Carry out calculations involving lengths and volumes of cubes and other cuboids, using formulae where appropriate (GMS 6:3a)
- Convert between different metric units of volume (GMS 6:3b)
- Use and understand the effects of scaling on area and volume (GMS 6:3c)

Explorer Progress Book 6, pp. 10–11

After completing work on this activity group, give small focus groups of children their Explorer Progress Books and ask them to work through the challenges on the pages. As children complete the pages, assess what progress they are making with the central ideas from the activity group. Refer to the assessment opportunities for assistance.

Explore More Copymaster 7: Curious Cuboids

After completing work on Activity 2, give children Explore More Copymaster 7: Curious Cuboids to take home.

Pupil Book 6, pp. 74–77

These pages in the Pupil Book provide further practice and challenging questions. You can use them to follow up the activities and deepen the learning.

Focus activities

1. Identifying a formula for calculating the volume of a cuboid
2. Solving problems using understanding of the volume of a cuboid
3. Exploring units of volume
4. Understanding scaling and similar shapes
5. Investigating the effect of scaling on length and area

© Oxford University Press 2025

Calculating 11: Adding and subtracting with fractions

Key mathematical ideas Equivalence, Fractions, Adding, Subtracting, Mathematical thinking and reasoning

Educational context

In this activity group children add and subtract fractions where one denominator is not a multiple of the other. This builds on their work in Numbers and the Number System 2, where they found common multiples and used understanding of equivalent fractions to express fractions in the same denomination, and hence compare and order them. Ensure that children are confident with these ideas before moving on to calculate with fractions.
Children begin by revisiting adding and subtracting common fractions totalling a whole, and fractions where one denominator is a multiple of the other, in order to reinforce their understanding of the relationship between fractions and whole numbers, and of equivalent fractions. They then progress to adding and subtracting fractions by finding the lowest common multiple of the denominators, and make links with fractions of amounts. As part of this work, children have opportunities to simplify fractions, work with improper fractions and mixed numbers, and solve increasingly complex problems, with the aim of becoming confident and fluent when working with fractions.
As children prepare for adding and subtracting fractions in a test environment, see Preparing for Formal Testing 4, Activity 2.

Learning opportunities

• To use common multiples and understanding of equivalent fractions to express fractions in the same denomination.
• To understand that fractions need to be in the same denomination before adding or subtracting.
• To add and subtract fractions and mixed numbers.
• To use common factors to simplify fractions.
• To apply knowledge and understanding of fractions to solve problems.
• To make connections between finding fractions of amounts and calculating with fractions.

Terms for children to use

equal parts, whole, part–whole relationship, numerator, denominator, proper fraction, improper fraction, mixed number, whole number, equivalent, lowest common multiple, LCM, simplify, simplest form, multiple, factor, proportion, array

Assessment opportunities

Look and listen for children who:
• Use the terms for children to use effectively.
• Can recognize common fraction equivalents.
• Understand that fractions need to be in the same denomination before adding or subtracting.
• Can explain fraction equivalences and calculating involving fractions, illustrating with structured apparatus or imagery.
• Convert, and explain equivalences, between improper fractions and mixed numbers.
• Can use an array to support and illustrate adding fractions.
• Can identify common factors in the numerator and denominator, and use these to express a fraction in its simplest form.
• Apply knowledge and understanding of fractions to solve problems.

NPC Milestone 4

• Add and subtract fractions and mixed numbers (NPC 6:4b)

Explorer Progress Book 6b, pp. 12–13

After completing work on this activity group, give small focus groups of children their Explorer Progress Books and ask them to work through the challenges on the pages. As children complete the pages, assess what progress they are making with the central ideas from the activity group. Refer to the assessment opportunities for assistance.

Explore More Copymaster 17: Weekly Activities

After completing work on Activity 4, give children Explore More Copymaster 17: Weekly Activities to take home.

Pupil Book 6, pp. 78–81

These pages in the Pupil Book provide further practice and challenging questions. You can use them to follow up the activities and deepen the learning.

Focus activities

1. Revisiting adding and subtracting fractions
2. Adding and subtracting fractions and mixed numbers whose denominators are multiples of the same number
3. Reasoning about fractions when solving problems
4. Adding and subtracting fractions whose denominators are not multiples of the same number
5. Using arrays to support calculating with fractions

© Oxford University Press 2025

Calculating 12: Multiplying and dividing with fractions

Key mathematical ideas Multiplying, Dividing, Equivalence, Fractions, Mathematical thinking and reasoning

Educational context

In this activity group children build on their work in Numbers and the Number System 2 and Calculating 11 on understanding and adding and subtracting with fractions, and extend it to multiplying and dividing with fractions.
They begin by exploring multiplying by a fraction, further developing their understanding of fractions as operators (that is, as mathematical objects in their own right), in particular through the idea of a 'fraction machine'. They are challenged to generalize to discover and explain for themselves a rule for multiplying two fractions together. They go on to consider dividing a proper fraction by a whole number, and again have the opportunity to identify and explain a general rule.
Throughout the activity group, support children to use resources and imagery to represent fractions in a variety of ways in order to help them explore, share and consolidate their understanding. Encourage them to talk through their ideas and explain their solutions, allowing plenty of time for discussion throughout.
Some of the activities involve a number of linked steps. Approaching them over several sessions will help to ensure that children have time to understand, explore and consolidate the ideas involved.
As children prepare for multiplying and dividing fractions in a test environment, see Preparing for Formal Testing 4, Activity 3.

Learning opportunities

- To make connections between multiplying by a fraction, using a fraction as an operator, and dividing.
- To multiply simple pairs of proper fractions.
- To divide proper fractions by whole numbers.
- To identify patterns and hence general rules about multiplying and dividing with fractions.

Terms for children to use

common fraction, proper fraction, improper fraction, unit fraction, numerator, denominator, equivalent, simplify, common factor, cancel, fraction of a fraction (e.g. one third of one quarter), grouping, sharing, repeated adding/subtracting, pattern, general rule, ratio, constant, scaling

Assessment opportunities

Look and listen for children who:
- Use the terms for children to use effectively.
- Can use a variety of resources and imagery to illustrate and reason about multiplying and dividing with fractions.
- Notice patterns and generalize to suggest rules for multiplying with fractions.
- Can describe and explain a general rule for multiplying a pair of fractions.
- Can identify whether a fraction is in its simplest form, and, if not, can express it in its simplest form by dividing the numerator and denominator by common factors.
- Use understanding of the sharing structure of dividing to help explain dividing a fraction by a whole number.
- Link dividing a fraction by a whole number with multiplying by a fraction.

NPC Milestone 4

- Multiply simple pairs of proper fractions (NPC 6:4c)
- Divide proper fractions by whole numbers (NPC 6:4d)

Explorer Progress Book 6b, pp. 14–15

After completing work on this activity group, give small focus groups of children their Explorer Progress Books and ask them to work through the challenges on the pages. As children complete the pages, assess what progress they are making with the central ideas from the activity group. Refer to the assessment opportunities for assistance.

Explore More Copymaster 18: Yoghurt Robot

After completing work on Activity 2, give children Explore More Copymaster 18: Yoghurt Robot to take home.

Pupil Book 6, pp. 82–85

These pages in the Pupil Book provide further practice and challenging questions. You can use them to follow up the activities and deepen the learning.

Focus activities

1. Multiplying two fractions
2. Multiplying two fractions using a fraction machine
3. Multiplying two fractions using a general rule
4. Dividing a proper fraction by a whole number

© Oxford University Press 2025

Pattern and Algebra 3: Using algebra to solve problems

Key mathematical ideas Reasoning, Problem solving, Algebra, Equivalence, Arithmetic operations, Patterns in using the four operations, Mathematical thinking and reasoning

Educational context

The overall purpose of this activity group is to introduce children to the use of algebraic notation in solving problems. The essential aim is for children to get used to the idea of representing problems in algebraic terms and finding solutions by manipulating those terms. Children progress from the use of familiar 'empty box' notation to the use of letters of the alphabet to represent an unknown value (or values). In Activity 2 letters (technically called 'variables') are introduced to represent unknown values, or 'unknowns', and in subsequent activities we develop the use of letters in this way to solve various problems. It will be increasingly important for children to distinguish this use of letters in problem solving from the other major use of letters in algebra (addressed in Pattern and Algebra 2), which is to generalize about relationships. When we write something such as '$x + y = 62$' (see Activity 2) we are using x and y to represent unknown amounts. When we write 'A = l × b' as the formula for the area of a rectangle we are using letters to generalize, and to claim that for any rectangle, whatever its dimensions, area is related to length and breadth as their product. This activity group is particularly concerned with using letters to represent unknown amount(s), and introducing children to the helpfulness of representing problems involving unknown amounts with letters.

Learning opportunities

- To express and solve missing number problems algebraically.
- To find pairs of numbers that satisfy an equation with two unknowns.
- To find all the possible combinations of two variables or unknowns.

Terms for children to use

algebra, algebraic, notation, symbol, solution, systematic, efficient, reasoning, strategy, logical, infinite, finite, operation, inverse, positive, negative, whole number, equivalent, fraction, term, expression, equation, unknown, general, generalize, simplify, possibilities

Assessment opportunities

Look and listen for children who:

- Use the words and terms for use in conversation effectively.
- Can describe a relationship between numbers.
- Can represent a relationship between numbers algebraically.
- Use conventional algebraic notation, e.g. 3a to indicate 3 × a.
- Identify whether an equation has one or many possible solutions.
- Can solve an equation and explain their reasoning.
- Work systematically to find all possible solutions to an equation.
- Can express and solve problems algebraically.

NPC Milestone 4

- Express missing number problems algebraically (NPC 6:4e)
- Enumerate possibilities of combinations of two unknowns (NPC 6:4f)

Explorer Progress Book 6b, pp. 16–17

After completing work on this activity group, give small focus groups of children their Explorer Progress Books and ask them to work through the challenges on the pages. As children complete the pages, assess what progress they are making with the central ideas from the activity group. Refer to the assessment opportunities for assistance.

Explore More Copymaster 3: Making Shortbread

After completing work on Activity 3, give children Explore More Copymaster 3: Making Shortbread to take home.

Pupil Book 6, pp. 86–89

These pages in the Pupil Book provide further practice and challenging questions. You can use them to follow up the activities and deepen the learning.

Focus activities

1. Exploring empty box problems
2. Using symbols and letters to express missing numbers
3. Solving problems using algebra
4. More problem solving with algebra
5. Finding all possibilities for two variables

© Oxford University Press 2025

Geometry 2: Circles

Key mathematical ideas Invariants, Statistics, Scaling

Educational context

The activities in this activity group build on children's previous work on 2D shapes, consolidating and extending their understanding of circles.
Children are introduced to the parts of the circle, the radius, diameter and circumference, and the activities allow them to examine the relationship between these different parts.
Through exploration and discussion children find a formula to show the relationship between the diameter d and radius r of a circle.
Through investigation, children recognize that the circumference is always a little more than 3 times the diameter; that is, the ratio of circumference to diameter is approximately 3:1 and that this important mathematical ratio is the same for any circle. Later activities in the group enable children to use pi (π) to solve practical problems.

Learning opportunities

- To use compasses to draw circles.
- To name parts of circles, including radius, diameter and circumference.
- To know that the diameter is twice the radius.
- To investigate the constant relationship between the circumference and the diameter.

Terms for children to use

circle, centre, circumference, diameter, radius, sector, circular, semicircle, compasses, point, equidistant, curve, polygon, non-polygon, congruent, similar, angle, turn, symmetry, constant, approximation, accuracy, precision, variation, error, data, sample, sample size, mean

Assessment opportunities

Look and listen for children who:
- Use the terms for children to use effectively.
- Describe the properties of a circle, e.g. it is a 2D shape, but not a polygon.
- Can write a formula to show that the diameter is twice the length of the radius.
- Explain that the angle at the centre of a circle is one full turn or 360°.
- Understand that the circumference of a circle is always a little more than three times the length of the diameter.

GMS Milestone 3

- Recognize and name the radius, diameter and circumference of any circle (GMS6:3d)
- Recognize that the diameter of any circle is twice the radius (GMS6:3e)

Explorer Progress Book 6, pp. 12–13

After completing work on this activity group, give small focus groups of children their Explorer Progress Books and ask them to work through the challenges on the pages. As children complete the pages, assess what progress they are making with the central ideas from the activity group. Refer to the assessment opportunities for assistance.

Explore More Copymaster 2: Easy as Pie

After completing work on Activity 3, give children Explore More Copymaster 2: Easy as Pie to take home.

Pupil Book 6, pp. 90–93

These pages in the Pupil Book provide further practice and challenging questions. You can use them to follow up the activities and deepen the learning.

Focus activities

1. Understanding the parts and properties of a circle
2. Investigating the relationship between circumference and diameter
3. Using the relationship between circumference and diameter
4. Solving problems using the relationship between circumference and diameter

© Oxford University Press 2025

Calculating 13: Solving non-routine problems using all four operations

Key mathematical ideas Adding, Subtracting, Multiplying, Dividing, Equivalence, Mathematical thinking and reasoning

Educational context

This activity group brings together children's learning from throughout the Calculating strand, giving them the opportunity to explore and make choices about calculating strategies and methods in a variety of non-routine problem-solving contexts. The activities require children to calculate with whole numbers, decimals, fractions and percentages; they also draw on children's understanding of measurement, including converting between different units. It is important to ensure
that children are confident with these ideas and skills before beginning the activity group.
Throughout, encourage children to decide for themselves how best to approach the problems, and to consider a variety of strategies and methods for calculating and verifying solutions. To help them develop understanding, accuracy and fluency in carrying out mental and written calculations in order to solve problems, provide plenty of opportunities for them to use, discuss, revisit and vary these techniques in as wide a variety of contexts as possible.

Learning opportunities

- To solve non-routine problems involving more than one step and more than one operation, identifying the calculations involved.
- To use mental and formal written methods of calculating.
- To estimate the answers to calculations by rounding and calculating mentally.
- To use equivalences to convert inches to centimetres and draw on other familiar metric conversions to solve problems.

Terms for children to use

calculating strategy, calculating method, short/long written method of multiplying/dividing, calculating mentally, calculating mentally with jottings, place value, redistribution, regrouping, 0 as a placeholder, whole number, decimal (fraction), (common) fraction, percentage, estimating, rounding, inverse, speed, pace, rate, distance, time, rotation, diameter, radius, π (pi), circumference, arc, discount, original price, discounted price, quotient

Assessment opportunities

Look and listen for children who:
- Use the terms for children to use effectively.
- Approach problem solving confidently and can identify alternative ways of solving a problem.
- Choose calculating strategies and methods which are appropriate to the problem.
- Work systematically to solve problems involving more than one step.
- Interpret answers or results to calculations and express solutions in appropriate units of measure, according to the problem context.
- Round numbers to an appropriate degree of accuracy when calculating, according to the problem context.

NPC Milestone 5

- Solve non-routine problems using all four operations (NPC 6:5b)

Explorer Progress Book 6b, pp. 18–19

After completing work on this activity group, give small focus groups of children their Explorer Progress Books and ask them to work through the challenges on the pages. As children complete the pages, assess what progress they are making with the central ideas from the activity group. Refer to the assessment opportunities for assistance.

Explore More Copymaster 19: Price Crash

After completing work on Activity 2, give children Explore More Copymaster 19: Price Crash to take home.

Pupil Book 6, pp. 94–97

These pages in the Pupil Book provide further practice and challenging questions. You can use them to follow up the activities and deepen the learning.

Focus activities

1. Solving non-routine problems involving decimals – dividing, multiplying and subtracting
2. Solving non-routine problems involving fractions and percentages – dividing, adding and subtracting
3. Solving non-routine problems – multiplying and dividing
4. Solving more non-routine problems – adding, multiplying and dividing

© Oxford University Press 2025

Geometry 3: Transformations in the four quadrants

Key mathematical ideas Invariants, Statistics, Scaling

Educational context

This activity group builds on children's previous work on coordinates (e.g. in the Geometry, Measurement and Statistics 4 and 5 Teaching Resource Handbooks, Geometry 4 and 2 respectively, where they were taught to use coordinates as a way of describing and recording position, as well as the term 'translation' and the idea of using coordinates to define precisely the start and end points of a translation).
Children continue to describe transformations with precision, this time describing the precise position of points using coordinates in all four quadrants, that is, with coordinates with positive and negative numbers. This, in turn, builds on work with negative numbers in Number, Pattern and Calculating 6 Teaching Resource Handbook, Calculating 1.
Children draw shapes and their images under given reflections or translations, and identify reflections and translations from given shapes. Children should be encouraged to work systematically, and allowed ample opportunity to predict results and then check their outcomes.

Learning opportunities

- To introduce coordinates in all four quadrants.
- To describe positions on the full coordinate grid.
- To draw and translate simple shapes on the coordinate plane, and reflect them in the axes.

Terms for children to use

point of intersection, axis, axes, origin, coordinate, quadrant, translate, transform, general instruction, congruent, positive, negative, direction, quadrilateral, polygon, bisect, vertex

Assessment opportunities

Look and listen for children who:
- Use the terms for children to use effectively.
- Can generalize that coordinates describe position in relation to given axes.
- Explain that to the right of the y-axis the x-coordinates are positive; to the left of the y-axis the x-coordinates are negative; above the x-axis the y-coordinates are positive; below the x-axis the y-coordinates are negative.
- Translate coordinates accurately using coordinates.
- Identify the translation that would move an original shape to its new position.
- Use written coordinates to visualize and predict results.
- Locate and name coordinates of 'missing' vertices of regular polygons.

GMS Milestone 3

- Read and plot points using coordinates in all four quadrants (GMS 6:3f)
- Describe, draw and translate 2D shapes using the coordinates of their vertices (GMS 6:3g)
- Reflect points and shapes in both x- and y-axes using coordinates (GMS 6:3h)
- Describe the movements of shapes accurately using the language of transformations (GMS 6:3i)

Explorer Progress Book 6, pp. 14–15

After completing work on this activity group, give small focus groups of children their Explorer Progress Books and ask them to work through the challenges on the pages. As children complete the pages, assess what progress they are making with the central ideas from the activity group. Refer to the assessment opportunities for assistance.

Explore More Copymaster 3: Translation Game

After completing work on Activity 3, give children Explore More Copymaster 3: Translation Game to take home.

Pupil Book 6, pp. 98–101

These pages in the Pupil Book provide further practice and challenging questions. You can use them to follow up the activities and deepen the learning.

Focus activities

1. Introducing coordinates in four quadrants
2. Using coordinates in four quadrants
3. Transformations in four quadrants – translation
4. Transformations in four quadrants – reflection in the axes
5. Exploring rectangles, parallelograms and rhombuses on the coordinate grid

© Oxford University Press 2025

Pattern and Algebra 4: Using symbols and letters for variables and unknowns

Key mathematical ideas Generalizing, Pattern, Algebra, Functions, Inverse, Equivalence, Mathematical thinking and reasoning

Educational context

In this activity group, children continue to explore how to describe general situations and rules mathematically. They are supported to express patterns numerically, e.g. as sequences and functions, and to identify and describe relationships between numbers, e.g. as formulae. This links to children's work in the *Geometry, Measurement and Statistics 6 Teaching Resource Handbook*, Measurement 2. This leads into describing general rules which apply in any instance of the same type of situation, and, building on their work in Pattern and Algebra 3, to expressing these rules concisely using algebra, with letters standing for unknown values and variables. For example, in Activity 6 they work out how to describe the commutative property of adding two numbers – the property that the order in which the numbers are added doesn't matter – more succinctly, as $a + b = b + a$.
Connecting with the work of Pattern and Algebra 2, we explore general rules of divisibility for help in finding factors.

Learning opportunities

- To describe a numerical pattern or general relationship in words and algebraically, as a formula.
- To recall and use tests of divisibility by 2, 3, 5, 9 and 10.
- To describe and explain the commutative property of adding and multiplying.

Terms for children to use

algebra, algebraic notation, symbol, generalize, reasoning, logic, systematic, show, prove, pattern, sequence, constant difference, term, first term, term- to-term rule, predict, relationship, general rule, general term, *n*th term, unknown, variable, value, expression, equation, equivalent, inverse, function, function machine, input, output, divisibility, test of divisibility, factor, multiple, prime, composite, commutative property, associative property, number trio, part–whole relationship

Assessment opportunities

Look and listen for children who:
- Use the terms for children to use effectively.
- Can identify the term-to-term rule in a linear sequence, e.g. in the sequence 38, 43, 48, 53, … the term-to-term rule is 'add 5'.
- Describe a rule for finding the general term of a linear sequence and express this with an algebraic expression, e.g. $5n + 33$ in Activity 1.
- Can explain algebraically how 'think of a number' problems work.
- Can explain the general relationship between an 'input' (x) and an 'output' (y) for a particular function (e.g. for a function described by $y = 3x$, y is always three times x, x is always one third of y).
- Can identify a missing input or output for a given function machine, and a missing instruction, e.g. '× 3' for a given set of inputs and outputs.
- Can write an equation to show the general relationship between input and output for a given function, represented as x and y respectively, e.g. $y = 3x$.
- Use tests of divisibility to sort numbers.
- Describe the commutative properties of adding and of multiplying in general terms, including algebraically, e.g. $a + b = b + a$, $ab = ba$.
- Can explain why adding and multiplying are commutative, while subtracting and dividing are not.

NPC Milestone 5

- Use symbols and letters to represent variables and unknowns in mathematical situations (NPC6:5a)

Explorer Progress Book 6b, pp. 20–23

After completing work on this activity group, give small focus groups of children their Explorer Progress Books and ask them to work through the challenges on the pages. As children complete the pages, assess what progress they are making with the central ideas from the activity group. Refer to the assessment opportunities for assistance.
Children will also have the opportunity to complete their Learning Log (pp. 22–23) where they can reflect on the mathematics they have done.

Explore More Copymaster 4: Secret Function Machine

After completing work on Activity 4, give children Explore More Copymaster 4: Secret Function Machine to take home.

Pupil Book 6, pp. 102–105

These pages in the Pupil Book provide further practice and challenging questions. You can use them to follow up the activities and deepen the learning.

Focus activities

1. Investigating rules and generalizing with algebra
2. Generalizing about linear sequences using symbols and letters
3. Generalizing about 'think of a number' problems
4. Using symbols to describe function machines
5. Generalizing about divisibility
6. Expressing general laws of arithmetic

© Oxford University Press 2025

Assessment support

The Explorer Progress Book pages will help you record and assess learning throughout the programme. Here are two additional tools to support you with assessment. Log on to your Numicon Online NZ subscription and click on the name of the resource below to open it.

Milestone Assessment cards

Materials for children's self-assessment: question cards, category cards, a quick guide, milestone statements, Teaching Progression and answers. NOTE: This resource is provided as a zip file. Download, right-click and click 'Extract' to open the files.

The question cards are also provided on the next page of this document.

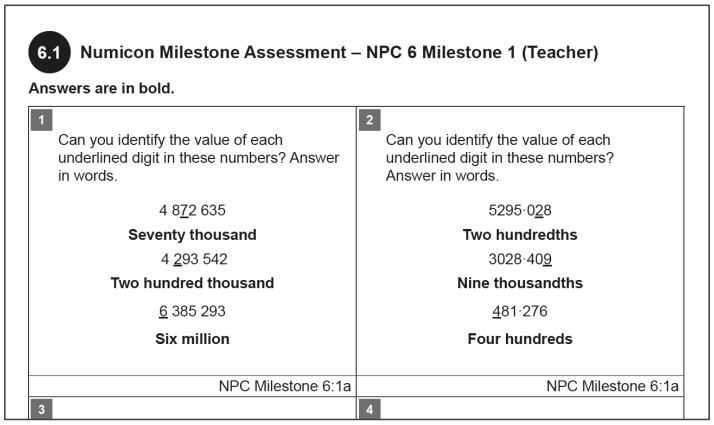

6.1 **Numicon Milestone Assessment – NPC 6 Milestone 1 (Teacher)**

Answers are in bold.

1	2
Can you identify the value of each underlined digit in these numbers? Answer in words. 4 8<u>7</u>2 635 **Seventy thousand** 4 <u>2</u>93 542 **Two hundred thousand** <u>6</u> 385 293 **Six million**	Can you identify the value of each underlined digit in these numbers? Answer in words. 5295·0<u>2</u>8 **Two hundredths** 3028·40<u>9</u> **Nine thousandths** <u>4</u>81·276 **Four hundreds**
NPC Milestone 6:1a	NPC Milestone 6:1a
3	4

Milestone Assessment Tracking

A detailed tracking sheet for assessing your class.

Milestone	Code	NPC / GM	Numicon strand	AG	NC strand
Number, Pattern & Calculating 6 Milestone 1					
By this point, children should be able to:					
• Understand the value of each digit in large numbers up to ten million and numbers with up to 3 decimal places	NPC6:1a	NPC	NNS	NNS1	Number & place value
• Order numbers with up to 8 digits and position them on a number line	NPC6:1b	NPC	NNS	NNS1	Number & place value
• Use appropriate mental methods to add, subtract, multiply and divide increasingly large numbers	NPC6:1c	NPC	C	C2	Add, subtract, multiply and divide
• Use different approaches to add and subtract negative numbers in context	NPC6:1d	NPC	C	C1	Number & place value
Number, Pattern & Calculating 6 Milestone 2					
By this point, children should be able to:					
• Identify common factors, common multiples and prime numbers	NPC6:2a	NPC	P&A	P&A1	Add, subtract, multiply and divide
• Compare and order fractions by expressing them as equivalent fractions with a common denominator	NPC6:2b	NPC	NNS	NNS2	Fractions
• Use estimation to check answers to calculations	NPC6:2c	NPC	C	C3	Add, subtract, multiply and divide
• Solve problems which require answers to be rounded to specified degrees of accuracy	NPC6:2d	NPC	C	C3	Add, subtract, multiply and divide
• Use column methods of adding and subtracting for larger numbers and decimals	NPC6:2e	NPC	C	C4	Add, subtract, multiply and divide
• Understand, recall and use equivalences between simple fractions, decimals and percentages	NPC6:2f	NPC	C	C5	Fractions
Geometry, Measurement & Statistics 6 Milestone 1					
By this point, children should be able to:					

© Oxford University Press 2025

Milestone Assessment cards

Click on a Numicon milestone below to jump to the question cards that relate to it.

Milestone	Milestone statements	
NPC Milestone 1	Understand the value of each digit in large numbers up to ten million and numbers with up to 3 decimal places	NPC6:1a
	Order numbers with up to 8 digits and position them on a number line	NPC6:1b
	Use appropriate mental methods to add, subtract, multiply and divide increasingly large numbers	NPC6:1c
	Use different approaches to add and subtract negative numbers in context	NPC6:1d
NPC Milestone 2	Identify common factors, common multiples and prime numbers	NPC6:2a
	Compare and order fractions by expressing them as equivalent fractions with a common denominator	NPC6:2b
	Use estimation to check answers to calculations	NPC6:2c
	Solve problems which require answers to be rounded to specified degrees of accuracy	NPC6:2d
	Use column methods of adding and subtracting for larger numbers and decimals	NPC6:2e
	Understand, recall and use equivalences between simple fractions, decimals and percentages	NPC6:2f
GMS Milestone 1	Use formal notation to denote parallel, perpendicular and equal length lines in geometric diagrams	GMS6:1a
	Recognize and classify a wide range of 2D shapes based on their properties	GMS6:1b
	Calculate missing angles in polygons, along straight lines, around a point and that are vertically opposite	GMS6:1c
	Construct triangles and other polygons from given properties	GMS6:1d
	Calculate the mean average of a set of data	GMS6:1e
	Create, use and interpret conversion graphs	GMS6:1f
	Convert between metric and imperial speeds	GMS6:1g
	Construct and interpret pie charts to solve problems	GMS6:1h
NPC Milestone 3	Use the BODMAS convention for order of operations to solve problems	NPC6:3a
	Generate and describe linear number sequences including expressing term to term and general rules of number patterns	NPC6:3b
	Solve problems involving unequal sharing and grouping using knowledge of fractions and multiples	NPC6:3c
	Recognize proportionality in contexts when the relations between quantities are in the same ratio	NPC6:3d
	Convert simple fractions to decimal fractions by dividing	NPC6:3e
GMS Milestone 2	Use formulae to find the area of triangles (area = $\frac{1}{2} \times b \times h$) and parallelograms (area = $b \times h$) and understand why they work	GMS6:2a
	Find the area of composite shapes by partitioning into triangles and/or rectangles	GMS6:2b
	Recognize and create nets of cubes	GMS6:2c
	Create nets of cuboids and prisms	GMS6:2d
	Use nets to calculate surface area	GMS6:2e

© Oxford University Press 2025

Milestone	Milestone statements	
NPC Milestone 4	Use short and long multiplying and dividing to solve problems, including those involving decimals	NPC6:4a
	Add and subtract fractions and mixed numbers	NPC6:4b
	Multiply simple pairs of proper fractions	NPC6:4c
	Divide proper fractions by whole numbers	NPC6:4d
	Express missing number problems algebraically	NPC6:4e
	Enumerate possibilities of combinations of two unknowns	NPC6:4f
GMS Milestone 3	Carry out calculations involving lengths and volumes of cubes and other cuboids, using formulae where appropriate	GMS6:3a
	Convert between different metric units of volume	GMS6:3b
	Use and understand the effects of scaling on area and volume	GMS6:3c
	Recognize and name the radius, diameter and circumference of any circle	GMS6:3d
	Recognize that the diameter of any circle is twice the radius	GMS6:3e
	Read and plot points using coordinates in all four quadrants	GMS6:3f
	Describe, draw and translate 2D shapes using the coordinates of their vertices	GMS6:3g
	Reflect points and shapes in both *x* and *y* axes using coordinates	GMS6:3h
	Describe the movements of shapes accurately using the language of transformations	GMS6:3i
NPC Milestone 5	Use symbols and letters to represent variables and unknowns in mathematical situations	NPC6:5a
	Solve non-routine problems using all four operations	NPC6:5b

© Oxford University Press 2025

6.1 Numicon Milestone Assessment – NPC 6 Milestone 1 (Pupil)

Answers are on the answer pages that follow.

1

Can you identify the value of each underlined digit in these numbers? Answer in words.

4 8<u>7</u>2 635

4 <u>2</u>93 542

<u>6</u> 385 293

NPC Milestone 6:1a

2

Can you identify the value of each underlined digit in these numbers? Answer in words.

5295·0<u>2</u>8

3028·40<u>9</u>

<u>4</u>81·276

NPC Milestone 6:1a

3

Can you order these numbers from smallest to largest?

34 333 433

43 344 334

34 433 433

43 433 443

33 434 334

NPC Milestone 6:1b

4

Can you position these numbers on a number line?

7676 7767 6076 6706 7607 6067

NPC Milestone 6:1b

5

Can you use a mental method to solve these?

372 × 17

485 × 26

347 × 36

NPC Milestone 6:1c

6

Can you use a mental method to solve these?

196 ÷ 14

552 ÷ 24

896 ÷ 32

NPC Milestone 6:1c

© Oxford University Press 2018. This page can be copied for use in the purchasing school

6.1 Numicon Milestone Assessment – NPC 6 Milestone 1 (Pupil)

Answers are on the answer pages that follow.

7

Patsy is struggling with negative numbers. Can you explain to her how to calculate $8 - 27$?

NPC Milestone 6:1d

8

Mount Everest's peak is 8848 metres above sea level. Challenger Deep is 10 994 metres below sea level. Can you calculate the difference between these extremes? Show your working.

NPC Milestone 6:1d

© Oxford University Press 2018. This page can be copied for use in the purchasing school

6.1 Numicon Milestone Assessment – NPC 6 Milestone 1 (Teacher)

Answers are in bold.

1

Can you identify the value of each underlined digit in these numbers? Answer in words.

4 8<u>7</u>2 635

Seventy thousand

4 <u>2</u>93 542

Two hundred thousand

<u>6</u> 385 293

Six million

NPC Milestone 6:1a

2

Can you identify the value of each underlined digit in these numbers? Answer in words.

5295·0<u>2</u>8

Two hundredths

3028·40<u>9</u>

Nine thousandths

<u>4</u>81·276

Four hundreds

NPC Milestone 6:1a

3

Can you order these numbers from smallest to largest?

33 434 334

34 333 433

34 433 433

43 344 334

43 433 443

NPC Milestone 6:1b

4

Can you position these numbers on a number line?

7676 7767 6076 6706 7607 6067

NPC Milestone 6:1b

5

Can you use a mental method to solve these?

Methods will vary.

372 × 17 **= 6324**

485 × 26 **= 12 610**

347 × 36 **= 12 492**

NPC Milestone 6:1c

6

Can you use a mental method to solve these?

Methods will vary.

196 ÷ 14 **= 14**

552 ÷ 24 **= 23**

896 ÷ 32 **= 28**

NPC Milestone 6:1c

© Oxford University Press 2018. This page can be copied for use in the purchasing school

6.1 Numicon Milestone Assessment – NPC 6 Milestone 1 (Teacher)

7

Patsy is struggling with negative numbers. Can you explain to her how to calculate 8 − 27?

Explanations will vary, e.g.

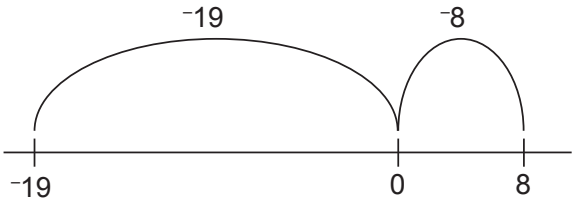

NPC Milestone 6:1d

8

Mount Everest's peak is 8848 metres above sea level. Challenger Deep is 10 994 metres below sea level. Can you calculate the difference between these extremes? Show your working.

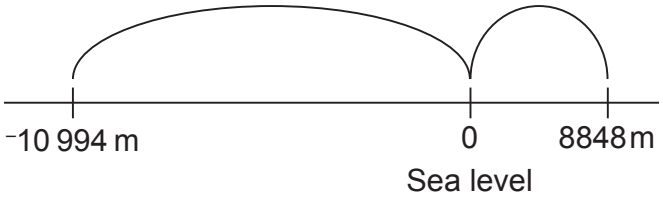

10 994 m + 8848 m = 19 842 m

NPC Milestone 6:1d

© Oxford University Press 2018. This page can be copied for use in the purchasing school

6.2 Numicon Milestone Assessment – NPC 6 Milestone 2 (Pupil)

Answers are on the answer pages that follow.

1

Can you write a prime factor sentence for these numbers?

324

437

618

NPC Milestone 6:2a

2

Can you find the lowest common multiple of each group of numbers?

4, 7, 12

10, 14, 25

12, 15, 28

NPC Milestone 6:2a

3

Can you convert these fractions to a common denominator and order them from smallest to largest?

$\frac{3}{5}$ $\frac{5}{12}$ $\frac{3}{10}$ $\frac{17}{30}$

NPC Milestone 6:2b

4

Can you explain how to find out which fraction of a pizza is the largest, between $\frac{39}{48}$ and $\frac{27}{32}$?

NPC Milestone 6:2b

5

Anne solved this calculation. Can you estimate to check if she is correct?

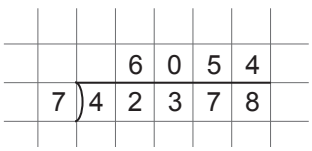

NPC Milestone 6:2c

6

£1 = 1·2592 Swiss Francs

Edward has £118 to change into Swiss Francs. Can you estimate how many he will receive?

NPC Milestone 6:2c

© Oxford University Press 2018. This page can be copied for use in the purchasing school

6.2 Numicon Milestone Assessment – NPC 6 Milestone 2 (Pupil)

Answers are on the answer pages that follow.

7

1 mile = 1·60934 km

Can you calculate 18·5 miles in kilometres?

Round your answer to 2 decimal places.

NPC Milestone 6:2d

8

Ali has these amounts of flour in separate bags. Can you round each amount to the nearest gram and say how many grams of flour he has in total?

20·4 g 42·73 g 339·6 g 56·92 g

NPC Milestone 6:2d

9

Can you solve this?

75 916·274 + 649 218·08

NPC Milestone 6:2e

10

Can you solve this?

487 349·409 − 24 937·827

NPC Milestone 6:2e

11

Can you find equivalences to complete the table?

Fraction	Percentage	Decimal
$\frac{1}{8}$		
	66·67%	
		0·8

NPC Milestone 6:2f

12

If 100% = £5.50, can you find these?

12%

$\frac{3}{5}$

0·28

NPC Milestone 6:2f

© Oxford University Press 2018. This page can be copied for use in the purchasing school

6.2 Numicon Milestone Assessment – NPC 6 Milestone 2 (Teacher)

1

Can you write a prime factor sentence for these numbers?

324 **= 2 × 2 × 3 × 3 × 3 × 3**

437 **= 19 × 23**

618 **= 2 × 3 × 103**

NPC Milestone 6:2a

2

Can you find the lowest common multiple of each group of numbers?

4, 7, 12**: 84**

10, 14, 25**: 350**

12, 15, 28**: 420**

NPC Milestone 6:2a

3

Can you convert these fractions to a common denominator and order them from smallest to largest?

$\frac{3}{5}$ $\frac{5}{12}$ $\frac{3}{10}$ $\frac{17}{30}$

Common denominator choices may vary.

E.g. convert to 60ths: $\frac{36}{60}$ $\frac{25}{60}$ $\frac{18}{60}$ $\frac{34}{60}$

Ordered as 60ths: $\frac{18}{60}$ $\frac{25}{60}$ $\frac{34}{60}$ $\frac{36}{60}$

Ordered in original form: $\frac{3}{10}$ $\frac{5}{12}$ $\frac{17}{30}$ $\frac{3}{5}$

NPC Milestone 6:2b

4

Can you explain how to find out which fraction of a pizza is the largest, between $\frac{39}{48}$ and $\frac{27}{32}$?

Explanations may vary.

Covert the fractions to a common denominator, e.g. simplify $\frac{39}{48}$ to $\frac{26}{32}$.

$\frac{27}{32}$ is larger.

NPC Milestone 6:2b

5

Anne solved this calculation. Can you estimate to check if she is correct?

			6	0	5	4
	7	)	4	2	3	7	8

Correct.
Estimation strategies may vary,
e.g. 42 000 ÷ 7 = 6000
6000 × 7 = 42 000

NPC Milestone 6:2c

6

£1 = 1·2592 Swiss Francs

Edward has £118 to change into Swiss Francs. Can you estimate how many he will receive?

Levels of accuracy may vary.

120 × 1·25 = 150 Swiss Francs

NPC Milestone 6:2c

© Oxford University Press 2018. This page can be copied for use in the purchasing school

6.2 Numicon Milestone Assessment – NPC 6 Milestone 2 (Teacher)

7

1 mile = 1·60934 km

Can you calculate 18·5 miles in kilometres?

Round your answer to 2 decimal places.

29·77 km

NPC Milestone 6:2d

8

Ali has these amounts of flour in separate bags. Can you round each amount to the nearest gram and say how many grams of flour he has in total?

20·4 g 42·73 g 339·6 g 56·92 g

20 g + 43 g + 340 g + 57 g = 460 g

NPC Milestone 6:2d

9

Can you solve this?

75 916·274 + 649 218·08

			7	5	9	1	6 ·	2	7	4
	+	6	4	9	2	1	8 ·	0	8	0
		7^{1}	2^{1}	5^{1}	1	3^{1}	4 ·	3^{1}	5	4

NPC Milestone 6:2e

10

Can you solve this?

487 349·409 − 24 937·827

		4	8	$\cancel{7}^{6}$	$^{1}3$	4	$\cancel{9}^{8}$ ·	$^{1}\cancel{4}^{3}$	$^{1}0$	9
	−		2	4	9	3	7 ·	8	2	7
		4	6	2	4	1	1 ·	5	8	2

NPC Milestone 6:2e

11

Can you find equivalences to complete the table?

Fraction	Percentage	Decimal
$\frac{1}{8}$	**12·5%**	**0·125**
$\frac{2}{3}$	66·67%	**0·667**
$\frac{4}{5}$	**80%**	0·8

NPC Milestone 6:2f

12

If 100% = £5.50, can you find these?

12% **: £0·66**

$\frac{3}{5}$ **: £3·30**

0·28 **: £1·54**

NPC Milestone 6:2f

© Oxford University Press 2018. This page can be copied for use in the purchasing school

6.1 Numicon Milestone Assessment – GMS 6 Milestone 1 (Pupil)

Answers are on the answer pages that follow.

1

Can you draw a regular quadrilateral and use formal notation to show any parallel sides, perpendicular sides and sides of equal length?

GMS Milestone 6:1a

2

Can you use formal notation to show any parallel sides, perpendicular sides and sides of equal length on this regular pentagon?

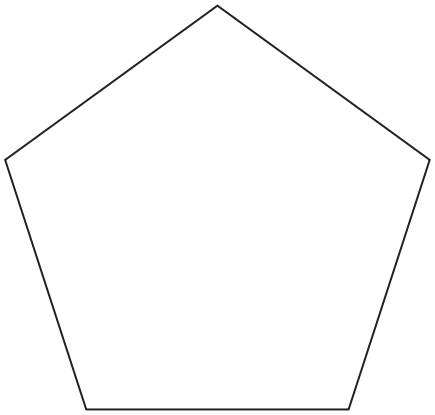

GMS Milestone 6:1a

3

Can you give an example of a shape that fits each of these descriptions?

a) A quadrilateral with 1 pair of parallel sides.

b) A quadrilateral with 4 right angles and 2 pairs of parallel sides.

c) A polygon with interior angles that total 180°, with sides that are of different lengths.

d) A quadrilateral with no parallel sides.

GMS Milestone 6:1b

4

Can you name three shapes that have perpendicular diagonals?

GMS Milestone 6:1b

© Oxford University Press 2018. This page can be copied for use in the purchasing school

6.1 Numicon Milestone Assessment – GMS 6 Milestone 1 (Pupil)

Answers are on the answer pages that follow.

5

Can you work out the size of angle a?

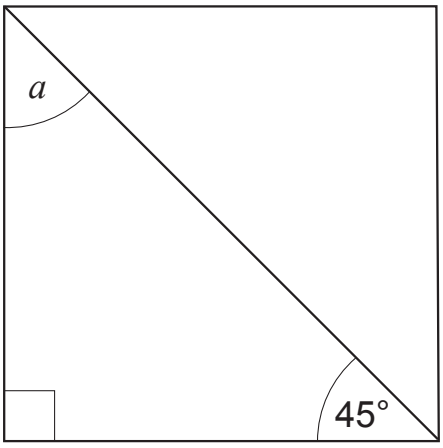

GMS Milestone 6:1c

6

Can you identify angles *b*, *c* and *d*?

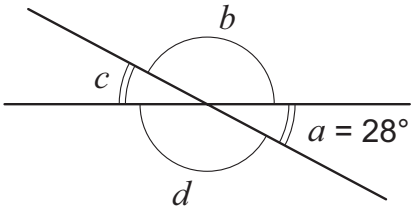

GMS Milestone 6:1c

7

Can you construct a right-angled isosceles triangle whose equal sides are 8·5 cm in length?

GMS Milestone 6:1d

8

Can you construct a regular hexagon with sides of 55 mm?

GMS Milestone 6:1d

© Oxford University Press 2018. This page can be copied for use in the purchasing school

6.1 Numicon Milestone Assessment – GMS 6 Milestone 1 (Pupil)

Answers are on the answer pages that follow.

9

Here are the masses of the strawberries in a punnet:

12 g	11 g
19 g	13 g
9 g	23 g
18 g	19 g
15 g	17 g
24 g	14 g
16 g	21 g

Can you find the mean average mass of a strawberry in this punnet?

GMS Milestone 6:1e

10

Faith thinks that this week was hotter in 2016 than in 2017. Can you work out the mean average for each week to see if Faith is correct?

	M	T	W	T	F	S	S
2016	16°C	18°C	16°C	13°C	15°C	18°C	18°C
2017	12°C	14°C	13°C	15°C	17°C	18°C	18°C

GMS Milestone 6:1e

11

Can you plot a conversion graph to show the relationship between kilograms and pounds, using the conversion
1 kg = 2·2 lbs?

GMS Milestone 6:1f

12

Can you use your conversion graph from question 11 to change these?

10 pounds into kilograms

8 kilograms into pounds

5·5 kg into pounds

GMS Milestone 6:1f

© Oxford University Press 2018. This page can be copied for use in the purchasing school

6.1 Numicon Milestone Assessment – GMS 6 Milestone 1 (Pupil)

Answers are on the answer pages that follow.

13

Can you complete the following table?

mph	1	10			50
km/h	1·6		35·2	56	

GMS Milestone 6:1g

14

5 miles = 8 kilometres

Amit runs 24 kilometres. Can you work out how far she runs in miles?

GMS Milestone 6:1g

15

Can you convert class 6R's birthday data into a pie chart?

Month	No. of birthdays	Month	No. of birthdays
January	0	July	2
February	1	August	4
March	1	September	7
April	3	October	3
May	1	November	2
June	5	December	1

GMS Milestone 6:1h

16

The data represents a survey of woodland trees. Can you complete the table and then show the data in a pie chart?
You can use a calculator to help you.

Broadleaf species	**Percentage**	**Angle in pie chart**
Oak	33%	
Beech	13%	
Sycamore		36°
Ash	19%	
Birch	24%	86·4°
Elm	1%	

GMS Milestone 6:1h

© Oxford University Press 2018. This page can be copied for use in the purchasing school

6.1 Numicon Milestone Assessment – GMS 6 Milestone 1 (Teacher)

1

Can you draw a regular quadrilateral and use formal notation to show any parallel sides, perpendicular sides and sides of equal length?

Answers will vary. Example:

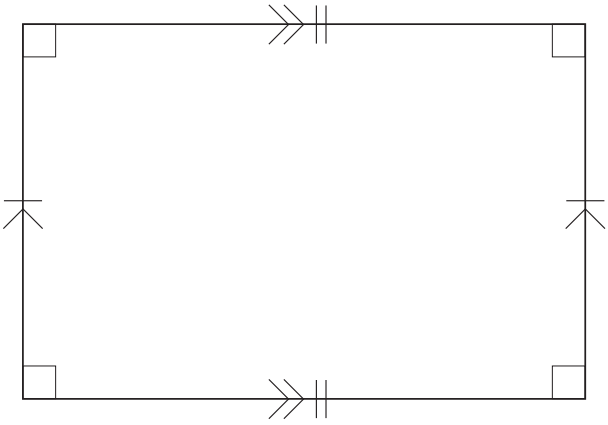

GMS Milestone 6:1a

2

Can you use formal notation to show any parallel sides, perpendicular sides and sides of equal length on this regular pentagon?

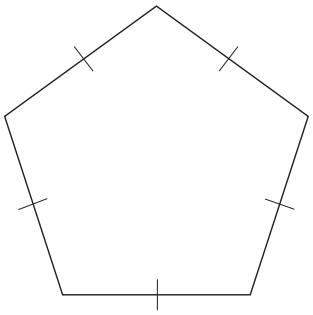

GMS Milestone 6:1a

3

Can you give an example of a shape that fits each of these descriptions?

a) A quadrilateral with 1 pair of parallel sides.
Trapezium

b) A quadrilateral with 4 right angles and 2 pairs of parallel sides.
Rectangle (square or oblong)

c) A polygon with interior angles that total 180°, with sides that are of different lengths.
Scalene triangle

d) A quadrilateral with no parallel sides.
Kite

GMS Milestone 6:1b

4

Can you name three shapes that have perpendicular diagonals?

Oblong (square and rectangle), parallelogram and kite.

GMS Milestone 6:1b

© Oxford University Press 2018. This page can be copied for use in the purchasing school

6.1 Numicon Milestone Assessment – GMS 6 Milestone 1 (Teacher)

5

Can you work out the size of angle a?

Angle a is
180 − 90 − 45 = 45°

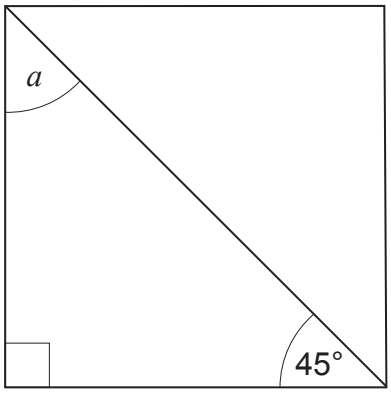

GMS Milestone 6:1c

6

Can you identify angles b, c and d?

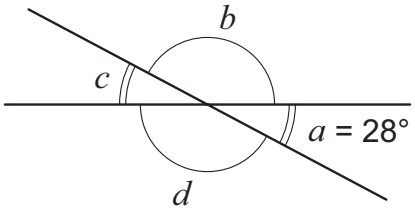

b = 152°

c = 28°

d = 152°

GMS Milestone 6:1c

7

Can you construct a right-angled isosceles triangle whose equal sides are 8·5 cm in length?

Check children's measurements are as annotated:

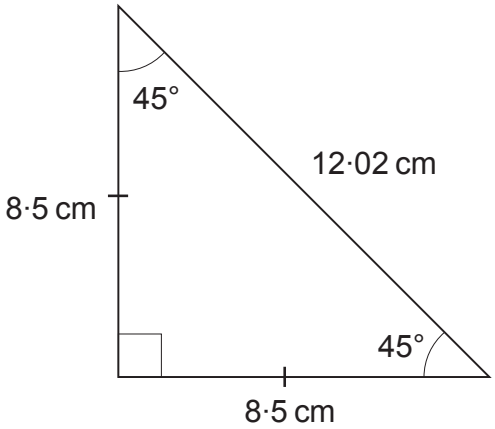

GMS Milestone 6:1d

8

Can you construct a regular hexagon with sides of 55 mm?

Check children's measurements are as annotated:

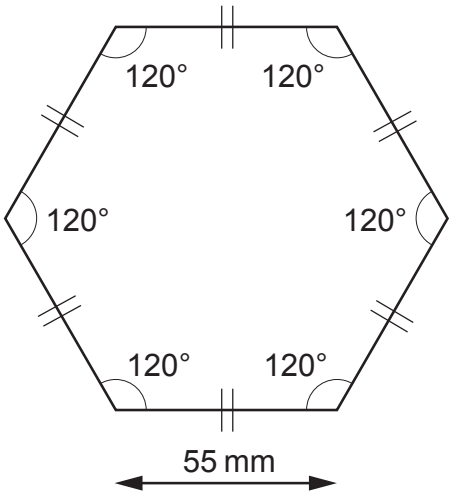

GMS Milestone 6:1d

© Oxford University Press 2018. This page can be copied for use in the purchasing school

9

Here are the masses of the strawberries in a punnet:

12 g	11 g
19 g	13 g
9 g	23 g
18 g	19 g
15 g	17 g
24 g	14 g
16 g	21 g

Can you find the mean average mass of a strawberry in this punnet?

16·5 g

GMS Milestone 6:1e

10

Faith thinks that this week was hotter in 2016 than in 2017. Can you work out the mean average for each week to see if Faith is correct?

	M	T	W	T	F	S	S
2016	16°C	18°C	16°C	13°C	15°C	18°C	18°C
2017	12°C	14°C	13°C	15°C	17°C	18°C	18°C

She is correct.

2016: 16°C

2017: 15°C

GMS Milestone 6:1e

11

Can you plot a conversion graph to show the relationship between kilograms and pounds, using the conversion 1 kg = 2·2 lbs?

Kilograms–Pounds Conversion Graph

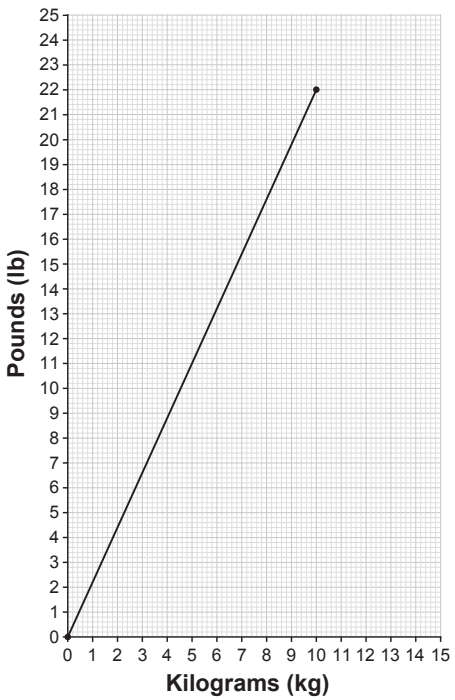

GMS Milestone 6:1f

12

Can you use your conversion graph from question 11 to change these?

10 pounds into kilograms
4·6 kilograms

8 kilograms into pounds
17·6 pounds

5·5 kg into pounds
12·1 pounds

GMS Milestone 6:1f

© Oxford University Press 2018. This page can be copied for use in the purchasing school

6.1 Numicon Milestone Assessment – GMS 6 Milestone 1 (Teacher)

13

Can you complete the following table?

mph	1	10	**22**	**35**	50
km/h	1·6	**16**	35·2	56	**80**

GMS Milestone 6:1g

14

5 miles = 8 kilometres

Amit runs 24 kilometres. Can you work out how far she runs in miles?

15 miles

24 ÷ 8 = 3

3 × 5 = 15

GMS Milestone 6:1g

15

Can you convert class 6R's birthday data into a pie chart?

Children create a pie chart with the following angles:

Month	No. of birthdays	Angle in pie chart
January	0	**0˚**
February	1	**12˚**
March	1	**12˚**
April	3	**36˚**
May	1	**12˚**
June	5	**60˚**
July	2	**24˚**
August	4	**48˚**
September	7	**84˚**
October	3	**36˚**
November	2	**24˚**
December	1	**12˚**

GMS Milestone 6:1h

16

The data represents a survey of woodland trees. Can you complete the table and then show the data in a pie chart?
You can use a calculator to help you.

Broadleaf species	**Percentage**	**Angle in pie chart**
Oak	33%	**118·8°**
Beech	13%	**46·8°**
Sycamore	**10%**	36°
Ash	19%	**68·4°**
Birch	24%	86·4°
Elm	1%	**3·6°**

Children create a pie chart with the angles from their completed table.

GMS Milestone 6:1h

© Oxford University Press 2018. This page can be copied for use in the purchasing school

6.3 Numicon Milestone Assessment – NPC 6 Milestone 3 (Pupil)

Answers are on the answer pages that follow.

1

Can you check Dougal's calculations and make any corrections that are necessary?

$78 - 16 \times 3 = 186$

$49 \times 6 \div 2 = 147$

$36 \div 6 \times 4 - 2 = 12$

NPC Milestone 6:3a

2

$6 + 3 \times 7 - 3$

Can you use the order of operations to solve this calculation?

How many different solutions can you find by adding brackets to the calculation?

NPC Milestone 6:3a

3

Kriti's car travels approximately 62 miles for each gallon of fuel.

How far will she travel if she uses 2 gallons, 4 gallons or 8 gallons of fuel?

Can you write a general rule for the distance travelled for any amount of fuel?

NPC Milestone 6:3b

4

$\$1 = £0{\cdot}77$

Can you represent pictorially the relationship between US dollars ($) and GB pounds (£) up to $5·00?

Can you write the general rule or formula for this sequence?

NPC Milestone 6:3b

© Oxford University Press 2018. This page can be copied for use in the purchasing school

6.3 Numicon Milestone Assessment – NPC 6 Milestone 3 (Pupil)

Answers are on the answer pages that follow.

5

There are 16 stickers on a sheet: 2 circles, 3 pineapples, 1 balloon, 4 cars, and the rest are stars.
Can you make a model to represent the sheet of stickers?

What fraction is each type of sticker?

If there are 112 stickers, can you calculate the number of each type of sticker?

NPC Milestone 6:3c

6

The florist makes mixed bouquets of 12 flowers. $\frac{1}{3}$ are tulips, $\frac{1}{4}$ are chrysanthemums, $\frac{1}{12}$ are roses and the remainder are carnations.
Can you work out how many of each flower will be needed to make 50 bouquets?

NPC Milestone 6:3c

7

I make a mosaic design using blue and white tiles. There are 2 blue tiles for every 4 white tiles. How many of each colour will there be if I use 72 tiles?

NPC Milestone 6:3d

8

For a summer fair, Jason makes 18 litres of squash using 1 part cordial to 2 parts water. Prakash makes the same amount of squash, using 2 parts cordial to 4 parts water. Who do you think uses more cordial? Can you explain?

NPC Milestone 6:3d

9

Can you convert the following fractions into decimals to three decimal places?

$\frac{3}{7}$

$\frac{5}{9}$

$\frac{2}{3}$

NPC Milestone 6:3e

10

How many centimetres are equivalent to $\frac{1}{11}$ of a metre?

NPC Milestone 6:3e

© Oxford University Press 2018. This page can be copied for use in the purchasing school

6.3 Numicon Milestone Assessment – NPC 6 Milestone 3 (Teacher)

1

Can you check Dougal's calculations and make any corrections that are necessary?

78 − **(**16 × 3**)** = ~~186~~ **30**

(49 × 6**)** ÷ 2 = 147

((36 ÷ 6**)** × 4**)** − 2 = ~~12~~ **22**

NPC Milestone 6:3a

2

6 + 3 × 7 − 3

Can you use the order of operations to solve this calculation?

6 + (3 × 7) − 3 = 24

How many different solutions can you find by adding brackets to the calculation?

(6 + 3) × 7 − 3 = 60
(6 + 3) × (7 − 3) = 36
6 + (3 × 7) − 3 = 24
6 + (3 × (7 − 3)) = 18

NPC Milestone 6:3a

3

Kriti's car travels approximately 62 miles for each gallon of fuel.

How far will she travel if she uses 2 gallons, 4 gallons or 8 gallons of fuel?

124 miles, 248 miles, 496 miles

Can you write a general rule for the distance travelled for any amount of fuel?

E.g. Distance = gallons of fuel × 62
or d = g × 62

NPC Milestone 6:3b

4

$1 = £0·77

Can you represent pictorially the relationship between US dollars ($) and GB pounds (£) up to $5·00?

Pictorial representations will vary, e.g. a straight line graph, table or double number line showing $1 = £0·77, $2 = £1·54, $3 = £2·31, $4 = £3·08, $5 = £3·85.

Can you write the general rule or formula for this sequence?

E.g. £ = 0·77 × $ or add £0·77 each time

NPC Milestone 6:3b

© Oxford University Press 2018. This page can be copied for use in the purchasing school

6.3 Numicon Milestone Assessment – NPC 6 Milestone 3 (Teacher)

5

There are 16 stickers on a sheet: 2 circles, 3 pineapples, 1 balloon, 4 cars, and the rest are stars.
Can you make a model to represent the sheet of stickers?

Answers will vary.

What fraction is each type of sticker?
$\frac{2}{16}$ circles, $\frac{3}{16}$ pineapples, $\frac{1}{16}$ balloons, $\frac{4}{16}$ cars, $\frac{6}{16}$ stars

If there are 112 stickers, can you calculate the number of each type of sticker?
14 circles, 21 pineapples, 7 balloons, 28 cars, 42 stars

NPC Milestone 6:3c

6

The florist makes mixed bouquets of 12 flowers. $\frac{1}{3}$ are tulips, $\frac{1}{4}$ are chrysanthemums, $\frac{1}{12}$ are roses and the remainder are carnations.
Can you work out how many of each flower will be needed to make 50 bouquets?

200 tulips

150 chrysanthemums

50 roses

200 carnations

NPC Milestone 6:3c

7

I make a mosaic design using blue and white tiles. There are 2 blue tiles for every 4 white tiles. How many of each colour will there be if I use 72 tiles?

24 blue tiles and 48 white tiles

NPC Milestone 6:3d

8

For a summer fair, Jason makes 18 litres of squash using 1 part cordial to 2 parts water. Prakash makes the same amount of squash, using 2 parts cordial to 4 parts water. Who do you think uses more cordial? Can you explain?

They both use the same amount of cordial. Jason uses 6 litres of cordial (with 12 litres of water). Prakash also uses 6 litres of cordial. Explanations will vary, but children should realize that the 1:2 ratio is equivalent to 2:4.

NPC Milestone 6:3d

9

Can you convert the following fractions into decimals to three decimal places?

$\frac{3}{7} \approx 0{\cdot}429$

$\frac{5}{9} \approx 0{\cdot}556$

$\frac{2}{3} \approx 0{\cdot}667$

NPC Milestone 6:3e

10

How many centimetres are equivalent to $\frac{1}{11}$ of a metre?

9·09 cm

NPC Milestone 6:3e

© Oxford University Press 2018. This page can be copied for use in the purchasing school

6.2 Numicon Milestone Assessment – GMS 6 Milestone 2 (Pupil)

Answers are on the answer pages that follow.

1

Can you calculate the area of this triangle and explain your method?

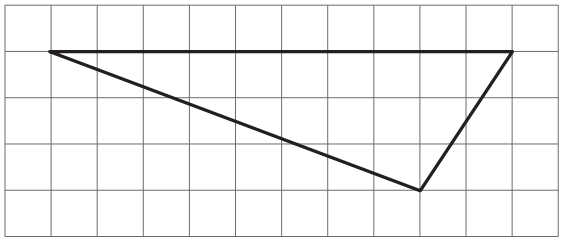

GMS Milestone 6:2a

2

Can you explain how to find the area of this 2D shape? What is the area?

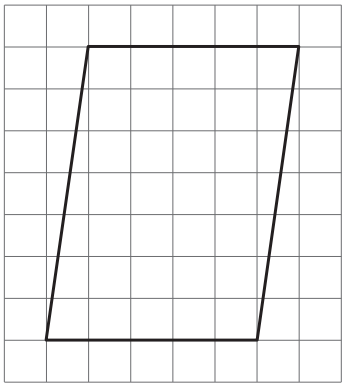

GMS Milestone 6:2a

3

Can you explain how to work out the area of this shape?

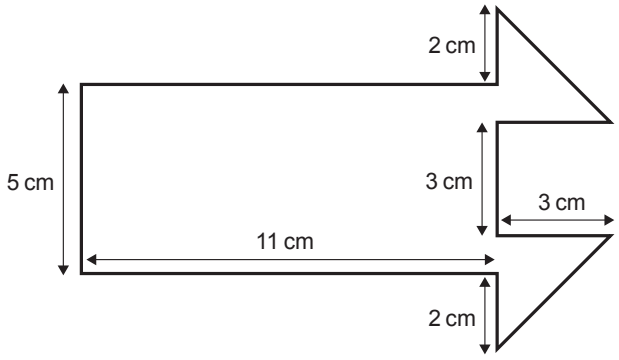

GMS Milestone 6:2b

4

Liana has drawn a plan of her garden.
Can you work out the area of the flowerbeds a, b and c below?

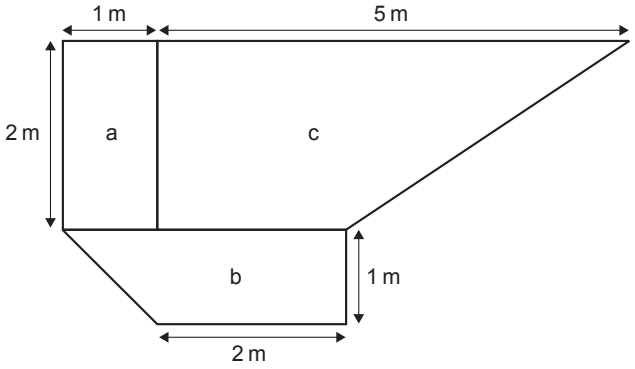

GMS Milestone 6:2b

© Oxford University Press 2018. This page can be copied for use in the purchasing school

6.2 Numicon Milestone Assessment – GMS 6 Milestone 2 (Pupil)

Answers are on the answer pages that follow.

5

Can you create two different nets of cubes using either concrete resources or drawings?

GMS Milestone 6:2c

6

Will this net form a cube?

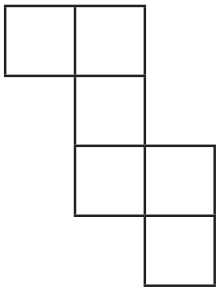

GMS Milestone 6:2c

7

Can you create a net for a hexagonal prism? You can use concrete resources or drawings.

GMS Milestone 6:2d

8

Can you create a net for a cuboid? You can use concrete resources or drawings.

GMS Milestone 6:2d

© Oxford University Press 2018. This page can be copied for use in the purchasing school

6.2 Numicon Milestone Assessment – GMS 6 Milestone 2 (Pupil)

Answers are on the answer pages that follow.

9

What is the surface area of a cube with 5 cm side lengths? You can draw the net to help you.

GMS Milestone 6:2e

10

Rosie is covering the outside of this cuboid with golden foil.

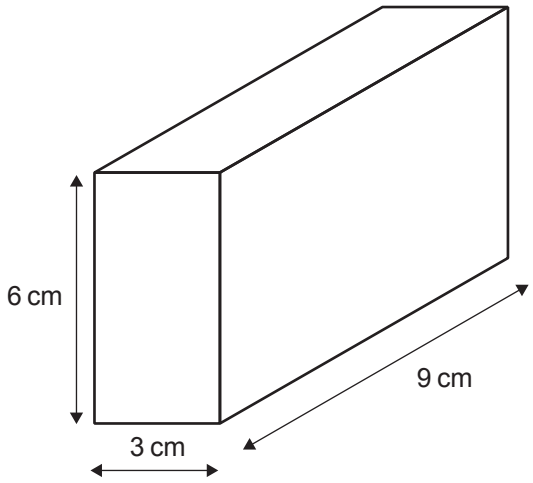

Can you work out the total surface area of foil she uses? You can draw the net to help you.

GMS Milestone 6:2e

© Oxford University Press 2018. This page can be copied for use in the purchasing school

6.2 Numicon Milestone Assessment – GMS 6 Milestone 2 (Teacher)

1

Can you calculate the area of this triangle and explain your method?

$\frac{1}{2}$ × 10 × 3 = 15 cm²

Applied the formula:
area of a triangle = $\frac{1}{2}$ × *b* × *h*

GMS Milestone 6:2a

2

Can you explain how to find the area of this 2D shape? What is the area?

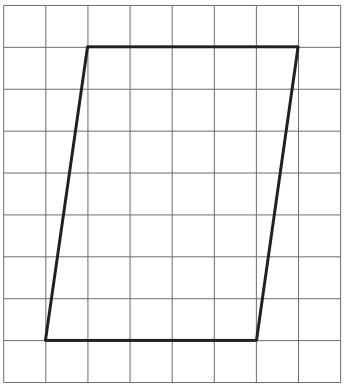

area of a parallelogram = *b* × *h*
5 × 7 = 35 cm²

GMS Milestone 6:2a

3

Can you explain how to work out the area of this shape?

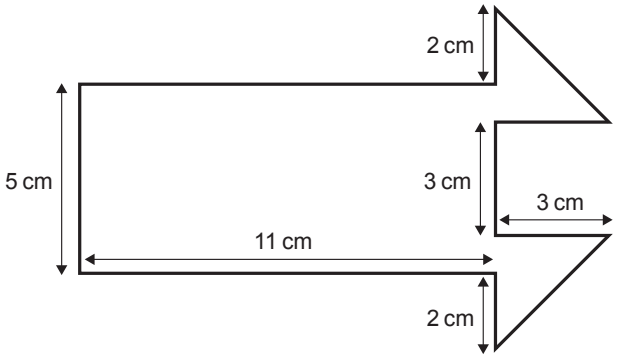

E.g. split the shape into an oblong and two triangles. The area of the oblong is length × height (11 × 5 = 55 cm²). To find the base of each triangle you take 3 cm away from 5 cm. You split this 2 cm equally between the two triangles (1 cm each) and add it to the rest of the base (2 cm) for a base of 3 cm in total. The area of each triangle is $\frac{1}{2}$ × base × height ($\frac{1}{2}$ × 3 × 3 = 4·5 cm²). Then you add the area of the oblong and two triangles together (4·5 cm² + 4·5 cm² + 55 cm² = 64 cm²)

GMS Milestone 6:2b

4

Liana has drawn a plan of her garden.
Can you work out the area of the flowerbeds a, b and c below?

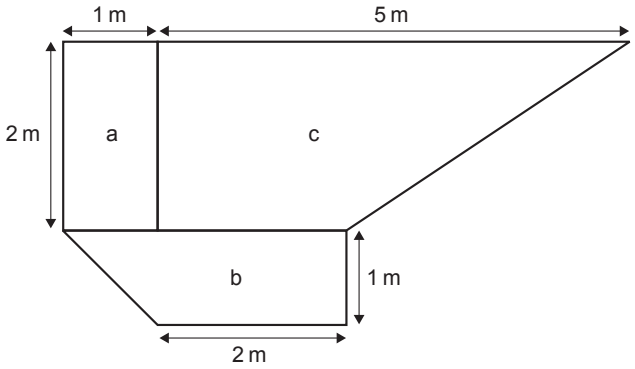

Area a = 2 m² (2 m × 1 m)

Area b = 3·5 m². It can be split into an oblong (2 m × 1 m = 2 m²) and a triangle ($\frac{1}{2}$ × 1 m (base) × 1 m (height) = 0·5 m²). 2 m² + 0·5 m² = 2·5 m².

Area c = 7 m². It can be split into a square (2 m × 2 m = 4 m²) and a triangle ($\frac{1}{2}$ × 2 m (base) × 3 m (height of 5 m − 2 m) = 3 m²). 4 m² + 3 m² = 7 m².

GMS Milestone 6:2b

© Oxford University Press 2018. This page can be copied for use in the purchasing school

6.2 Numicon Milestone Assessment – GMS 6 Milestone 2 (Teacher)

5

Can you create two different nets of cubes using either concrete resources or drawings?

Answers will vary.

GMS Milestone 6:2c

6

Will this net form a cube?

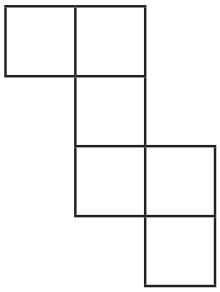

Yes

GMS Milestone 6:2c

7

Can you create a net for a hexagonal prism? You can use concrete resources or drawings.

Answers will vary.

GMS Milestone 6:2d

8

Can you create a net for a cuboid? You can use concrete resources or drawings.

Answers will vary.

GMS Milestone 6:2d

© Oxford University Press 2018. This page can be copied for use in the purchasing school

9

What is the surface area of a cube with 5 cm side lengths? You can draw the net to help you.

150 cm²

5 × 5 cm = 25 cm² for the surface area of 1 face. For the total surface area, 25 × 6 faces = 150 cm².

Drawings of nets will vary.

GMS Milestone 6:2e

10

Rosie is covering the outside of this cuboid with golden foil.

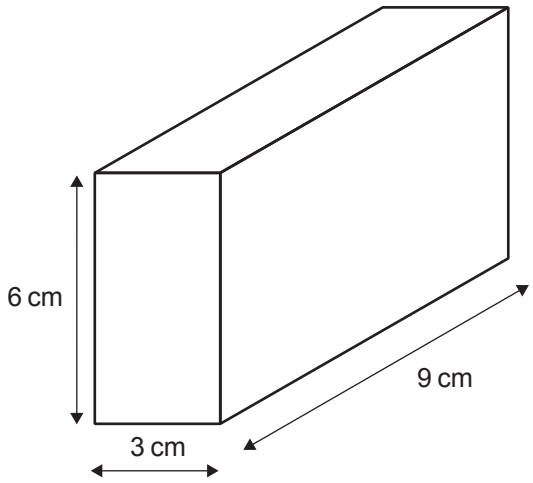

Can you work out the total surface area of foil she uses? You can draw the net to help you.

(2 × 6 × 3) + (2 × 9 × 3) + (2 × 9 × 6) = 198 cm²

Drawings of nets will vary.

GMS Milestone 6:2e

© Oxford University Press 2018. This page can be copied for use in the purchasing school

6.4 Numicon Milestone Assessment – NPC 6 Milestone 4 (Pupil)

Answers are on the answer pages that follow.

1

Each type of symbol represents a different digit. Can you work out what they are?

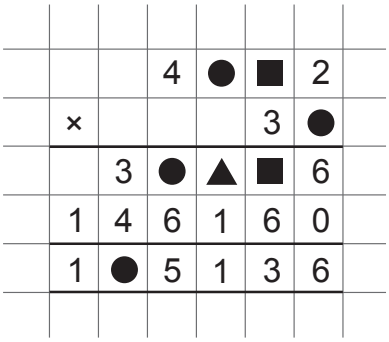

NPC Milestone 6:4a

2

Can you solve this?

$2853 \div 36$

NPC Milestone 6:4a

3

Can you solve these?

$1\frac{7}{8} + \frac{1}{4} + \frac{27}{12}$

$\frac{7}{9} + \frac{11}{36}$

NPC Milestone 6:4b

4

Can you explain how to solve this?

$\frac{4}{6} - \frac{1}{4}$

NPC Milestone 6:4b

5

Can you multiply these fractions?

$\frac{2}{3} \times \frac{4}{5}$

$\frac{3}{4} \times \frac{5}{8}$

$\frac{1}{7} \times \frac{2}{9}$

NPC Milestone 6:4c

6

Can you multiply these fractions? Simplify your answers.

$\frac{5}{6} \times \frac{2}{5}$

$\frac{4}{5} \times \frac{5}{12}$

$\frac{2}{3} \times \frac{1}{6}$

NPC Milestone 6:4c

© Oxford University Press 2018. This page can be copied for use in the purchasing school

6.4 Numicon Milestone Assessment – NPC 6 Milestone 4 (Pupil)

Answers are on the answer pages that follow.

7

Can you solve these?

$\frac{2}{3} \div 6$

$\frac{3}{5} \div 4$

NPC Milestone 6:4d

8

Can you solve these?

$\frac{4}{7} \div 3$

$\frac{4}{9} \div 5$

NPC Milestone 6:4d

9

Can you use algebraic notation to express these missing number problems?

$18 \times ? = 126$

■ + ● = 78

▲ × ▲ = ?

NPC Milestone 6:4e

10

Can you use algebraic notation to express how to solve this adding pyramid?

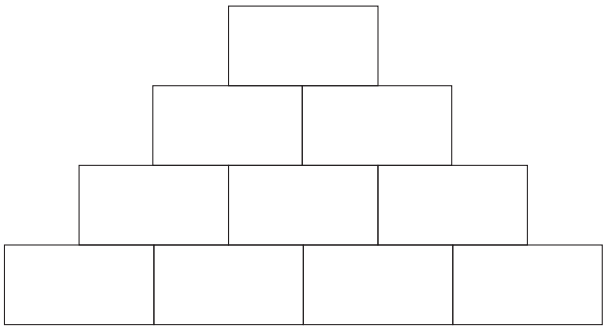

NPC Milestone 6:4e

11

Chas puts two numbers rods in a feely bag. The total length of the rods is 15 cm. Can you use algebra to show the possible rods he has used?

NPC Milestone 6:4f

12

Rajel buys 3 packs of nut bars and 4 packs of fruit bars.The packs of nut bars contain a different number of bars than the packs of fruit bars. There are 40 bars altogether. Can you find all the possible numbers of bars in each pack?

NPC Milestone 6:4f

© Oxford University Press 2018. This page can be copied for use in the purchasing school

6.4 Numicon Milestone Assessment – NPC 6 Milestone 4 (Teacher)

1

Each type of symbol represents a different digit. Can you work out what they are?

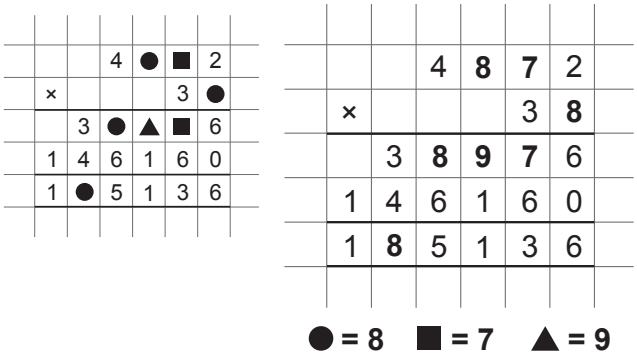

● = 8 ■ = 7 ▲ = 9

NPC Milestone 6:4a

2

Can you solve this?

2853 ÷ 36

79·25

NPC Milestone 6:4a

3

Can you solve these?

$1\frac{7}{8} + \frac{1}{4} + \frac{27}{12} = \mathbf{\frac{105}{24} = 4\frac{9}{24} = 4\frac{3}{8}}$

$\frac{7}{9} + \frac{11}{36} = \mathbf{\frac{39}{36} = 1\frac{3}{36} = 1\frac{1}{12}}$

NPC Milestone 6:4b

4

Can you explain how to solve this?

$\frac{4}{6} - \frac{1}{4}$

Find the lowest common multiple of 6 and 4, which is 12. Converting the two fractions into twelfths gives you:

$\mathbf{\frac{8}{12} - \frac{3}{12} = \frac{5}{12}}$

NPC Milestone 6:4b

5

Can you multiply these fractions?

$\frac{2}{3} \times \frac{4}{5} = \mathbf{\frac{8}{15}}$

$\frac{3}{4} \times \frac{5}{8} = \mathbf{\frac{15}{32}}$

$\frac{1}{7} \times \frac{2}{9} = \mathbf{\frac{2}{63}}$

NPC Milestone 6:4c

6

Can you multiply these fractions? Simplify your answers.

$\frac{5}{6} \times \frac{2}{5} = \mathbf{\frac{1}{3}}$

$\frac{4}{5} \times \frac{5}{12} = \mathbf{\frac{1}{3}}$

$\frac{2}{3} \times \frac{1}{6} = \mathbf{\frac{1}{9}}$

NPC Milestone 6:4c

© Oxford University Press 2018. This page can be copied for use in the purchasing school

6.4 Numicon Milestone Assessment – NPC 6 Milestone 4 (Teacher)

7

Can you solve these?

$\frac{2}{3} \div 6 = \mathbf{\frac{1}{9}}$

$\frac{3}{5} \div 4 = \mathbf{\frac{3}{20}}$

NPC Milestone 6:4d

8

Can you solve these?

$\frac{4}{7} \div 3 = \mathbf{\frac{4}{21}}$

$\frac{4}{9} \div 5 = \mathbf{\frac{4}{45}}$

NPC Milestone 6:4d

9

Can you use algebraic notation to express these missing number problems?

Letter selections will vary.

18 × ? = 126

$18a = 126$

■ + ● = 78

$a + b = 78$

▲ × ▲ = ?

$e \times e = f$

NPC Milestone 6:4e

10

Can you use algebraic notation to express how to solve this adding pyramid?

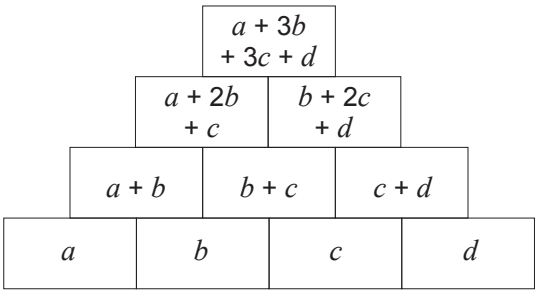

NPC Milestone 6:4e

11

Chas puts two numbers rods in a feely bag. The total length of the rods is 15 cm. Can you use algebra to show the possible rods he has used?

$a + b = 15$

10 + 5 = 15

9 + 6 = 15

8 + 7 = 15

NPC Milestone 6:4f

12

Rajel buys 3 packs of nut bars and 4 packs of fruit bars.The packs of nut bars contain a different number of bars than the packs of fruit bars. There are 40 bars altogether. Can you find all the possible numbers of bars in each pack?

a	1	2	3	4	5	6	7	8	9	10	11	12
b	x	x	x	7	x	x	x	4	x	x	x	1

Packs of 4 and 7, 8 and 4 (or 12 and 1, but children may agree that a pack of 1 isn't a pack).

NPC Milestone 6:4f

© Oxford University Press 2018. This page can be copied for use in the purchasing school

6.3 Numicon Milestone Assessment – GMS 6 Milestone 3 (Pupil)

Answers are on the answer pages that follow.

1

Kieran is trying to draw a cuboid but has forgotten some of the measurements.
He remembers that all measurements are whole numbers, that the volume is 320 cm^3 and that the height is 8 cm.
Can you suggest three possible pairs of measurements for the length and width?

GMS Milestone 6:3a

2

Can you work out the volume of a bedroom that measures 4 m × 2·5 m × 2·5 m?

GMS Milestone 6:3a

3

Can you identify how many litres are equivalent to 4 m^3?

GMS Milestone 6:3b

4

Jan and Paul are discussing converting 7·5 mm^3 into cm^3.
Both agree that 10 mm = 1 cm.
Jan thinks the answer is 0·075 cm^3.
Paul thinks it is 0·0075 cm^3.
Can you explain who you agree with and why?

GMS Milestone 6:3b

© Oxford University Press 2018. This page can be copied for use in the purchasing school

6.3 Numicon Milestone Assessment – GMS 6 Milestone 3 (Pupil)

Answers are on the answer pages that follow.

5

A scaled drawing of an oblong measures 5·5 cm × 6 cm. Can you work out the area of the actual oblong which is 6 times larger?

GMS Milestone 6:3c

6

A cuboid with a volume of 72 cm^3 is scaled up by 4. Can you work out the new cuboid's volume?

GMS Milestone 6:3c

7

Can you label the circumference on this circle?

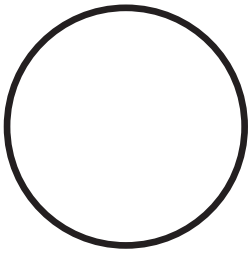

GMS Milestone 6:3d

8

Bob has labelled the parts of the circle.
Do you agree with his labels?
Can you explain why?

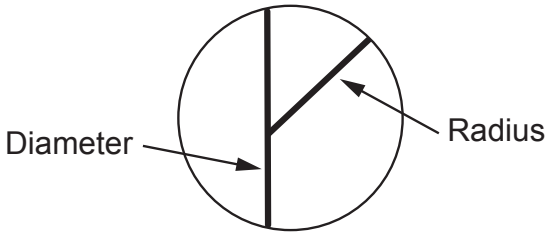

GMS Milestone 6:3d

© Oxford University Press 2018. This page can be copied for use in the purchasing school

6.3 Numicon Milestone Assessment – GMS 6 Milestone 3 (Pupil)

Answers are on the answer pages that follow.

9

Can you describe the relationship between the diameter and radius of any circle?

GMS Milestone 6:3e

10

Alexi measures the radius of a circle as 19 mm. Can you identify the length of the diameter? Explain your thinking.

GMS Milestone 6:3e

11

Using squared paper, can you plot a pentagon in the second quadrant and record its coordinates?

GMS Milestone 6:3f

12

Can you plot the coordinates below? You can use a coordinate grid or graph paper.

$(^{-}6,3)$ $(^{-}4,^{-}2)$ $(^{-}8,1)$ $(^{-}3,1)$ $(8,^{-}3)$ $(6,3)$

GMS Milestone 6:3f

© Oxford University Press 2018. This page can be copied for use in the purchasing school

6.3 Numicon Milestone Assessment – GMS 6 Milestone 3 (Pupil)

Answers are on the answer pages that follow.

12

Can you plot and connect these coordinates? You can use a coordinate grid or graph paper.

(⁻5,2) (⁻2,4) (⁻5,8) (⁻7,6) (⁻5,2)

Now can you translate the coordinates to $(x + 9, y - 9)$?

GMS Milestone 6:3g

13

Can you plot and connect these coordinates? You can use a coordinate grid or graph paper.

(⁻3,9) (⁻3,6) (⁻5,4) (⁻8,4) (⁻8,7) (⁻6,9) (⁻3,9)

Make up a translation, e.g. $(x - 4, y + 5)$ and apply it to your shape.

GMS Milestone 6:3g

14

Can you plot an oblong in the third quadrant and then reflect its points in the x-axis? You can use a coordinate grid or graph paper.

GMS Milestone 6:3h

15

(8,⁻3) (5,⁻7) (2,⁻3) (5,1)

Can you reflect each of these points in the y-axis? Use a coordinate grid or graph paper.

GMS Milestone 6:3h

© Oxford University Press 2018. This page can be copied for use in the purchasing school

6.3 Numicon Milestone Assessment – GMS 6 Milestone 3 (Pupil)

Answers are on the answer pages that follow.

16

Can you plot these two sets of coordinates?

You can use a coordinate grid or graph paper.

Shape A (3,⁻2) (8,⁻2) (8,⁻5) (3,⁻5) (3,⁻2)
Shape B (4,⁻1) (7,⁻1) (7,⁻6) (4,⁻6) (4,⁻1)

Can you describe the relationship between Shape A and Shape B?

GMS Milestone 6:3i

17

Can you plot and connect these coordinates?

You can use a coordinate grid or graph paper.

(2,6) (6,7) (9,2) (5,3) (2,6)

Choose a way to translate the shape and describe the movement and coordinates.

GMS Milestone 6:3i

© Oxford University Press 2018. This page can be copied for use in the purchasing school

6.3 Numicon Milestone Assessment – GMS 6 Milestone 3 (Teacher)

1

Kieran is trying to draw a cuboid but has forgotten some of the measurements. He remembers that all measurements are whole numbers, that the volume is 320 cm^3 and that the height is 8 cm. Can you suggest three possible pairs of measurements for the length and width?

Any three of:

1 cm and 40 cm

2 cm and 20 cm

4 cm and 10 cm

5 cm and 8 cm

GMS Milestone 6:3a

2

Can you work out the volume of a bedroom that measures 4 m × 2·5 m × 2·5 m?

25 cm^3

GMS Milestone 6:3a

3

Can you identify how many litres are equivalent to 4 m^3?

4000 ℓ

GMS Milestone 6:3b

4

Jan and Paul are discussing converting 7·5 mm^3 into cm^3.
Both agree that 10 mm = 1 cm.
Jan thinks the answer is 0·075 cm^3.
Paul thinks it is 0·0075 cm^3.
Can you explain who you agree with and why?

Paul. Explanations will vary. Some children may use the example of a cube to illustrate:
The base of a 1 cm^3 cube is 10 mm × 10 mm = 100 mm^2, so the volume of the cube is 100 mm^2 × 10 mm = 1000 mm^3.

Since 1000 mm^3 = 1 cm^3,

1 mm^3 = $\frac{1}{1000}$ or 0·001 cm^3.

So 7·5 × 0·001 cm^3 = 0·0075 cm^3.

GMS Milestone 6:3b

© Oxford University Press 2018. This page can be copied for use in the purchasing school

6.3 Numicon Milestone Assessment – GMS 6 Milestone 3 (Teacher)

5

A scaled drawing of an oblong measures 5·5 cm × 6 cm. Can you work out the area of the actual oblong which is 6 times larger?

1188 cm²

GMS Milestone 6:3c

6

A cuboid with a volume of 72 cm³ is scaled up by 4. Can you work out the new cuboid's volume?

Answers could cube the scale factor of 4 to get 64 and then calculate 72 × 64 = 4608 cm³.

Or consider the dimensions of the cuboid, e.g. 2 × 6 × 6 and then scale these by 4 to give 8 × 24 × 24 = 4608 cm³.

GMS Milestone 6:3c

7

Can you label the circumference on this circle?

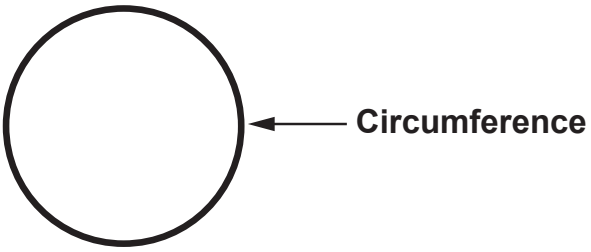

GMS Milestone 6:3d

8

Bob has labelled the parts of the circle.
Do you agree with his labels?
Can you explain why?

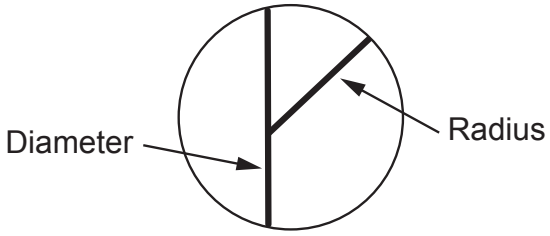

No. The diameter should pass through the centre of the circle and the radius should be half the diameter and connect from the centre to the circumference.

GMS Milestone 6:3d

© Oxford University Press 2018. This page can be copied for use in the purchasing school

6.3 Numicon Milestone Assessment – GMS 6 Milestone 3 (Teacher)

9

Can you describe the relationship between the diameter and radius of any circle?

The diameter is twice the radius.
The radius is half the diameter.

GMS Milestone 6:3e

10

Alexi measures the radius of a circle as 19 mm. Can you identify the length of the diameter? Explain your thinking.

38 mm

This is twice the length of the radius.

GMS Milestone 6:3e

11

Using squared paper, can you plot a pentagon in the second quadrant and record its coordinates?

Answers will vary. The x-values should be negative and y-values positive.

GMS Milestone 6:3f

12

Can you plot the coordinates below? You can use a coordinate grid or graph paper.

$(^{-}6,3)$ $(^{-}4,^{-}2)$ $(^{-}8,1)$ $(^{-}3,1)$ $(8,^{-}3)$ $(6,3)$

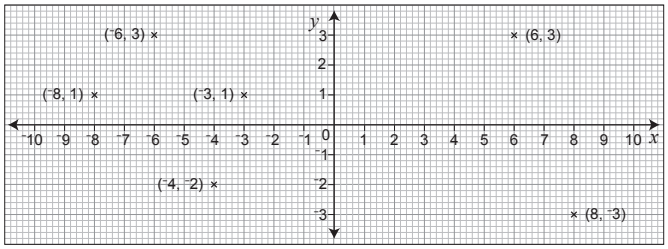

GMS Milestone 6:3f

© Oxford University Press 2018. This page can be copied for use in the purchasing school

12

Can you plot and connect these coordinates? You can use a coordinate grid or graph paper.

(⁻5,2) (⁻2,4) (⁻5,8) (⁻7,6) (⁻5,2)

Now can you translate the coordinates to $(x + 9, y - 9)$?

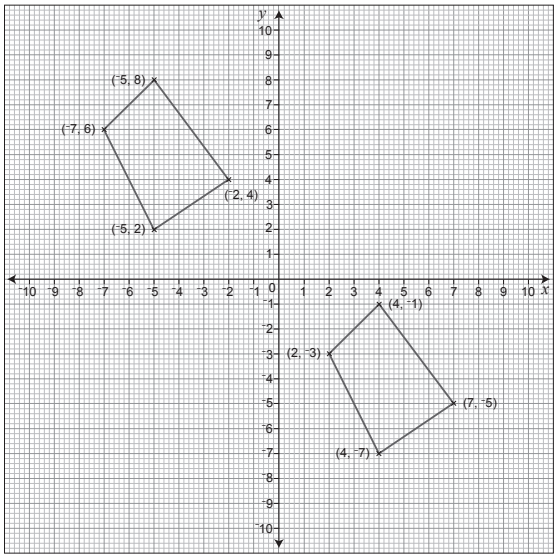

GMS Milestone 6:3g

13

Can you plot and connect these coordinates? You can use a coordinate grid or graph paper.

(⁻3,9) (⁻3,6) (⁻5,4) (⁻8,4) (⁻8,7) (⁻6,9) (⁻3,9)

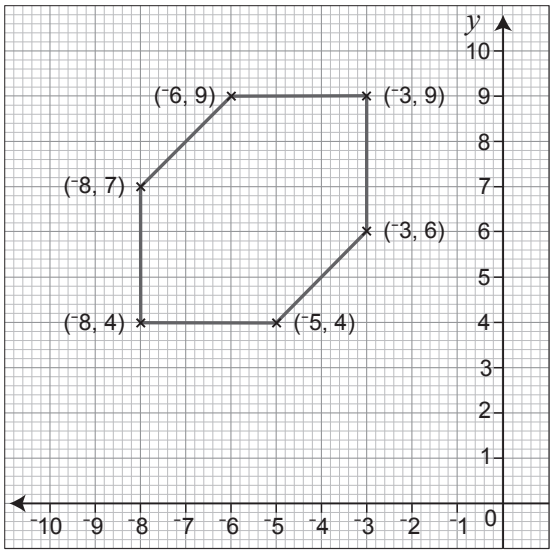

Make up a translation, e.g. $(x - 4, y + 5)$ and apply it to your shape.

Answers will vary.

GMS Milestone 6:3g

14

Can you plot an oblong in the third quadrant and then reflect its points in the x-axis? You can use a coordinate grid or graph paper.

Answers will vary.

GMS Milestone 6:3h

15

(8,⁻3) (5,⁻7) (2,⁻3) (5,1)

Can you reflect each of these points in the y-axis? Use a coordinate grid or graph paper.

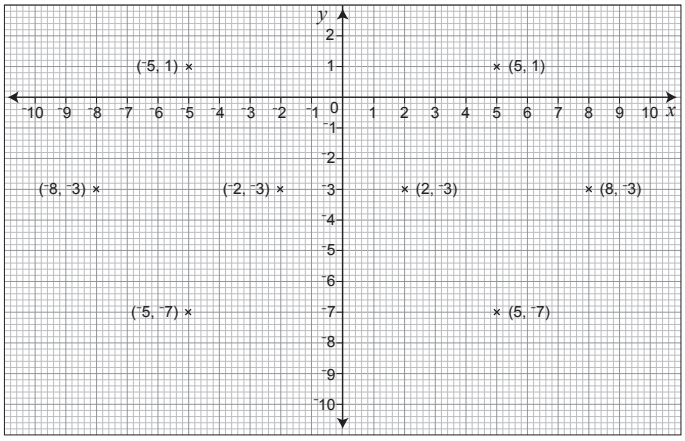

GMS Milestone 6:3h

© Oxford University Press 2018. This page can be copied for use in the purchasing school

6.3 Numicon Milestone Assessment – GMS 6 Milestone 3 (Teacher)

16

Can you plot these two sets of coordinates?

You can use a coordinate grid or graph paper.

Shape A (3,⁻2) (8,⁻2) (8,⁻5) (3,⁻5) (3,⁻2)
Shape B (4,⁻1) (7,⁻1) (7,⁻6) (4,⁻6) (4,⁻1)

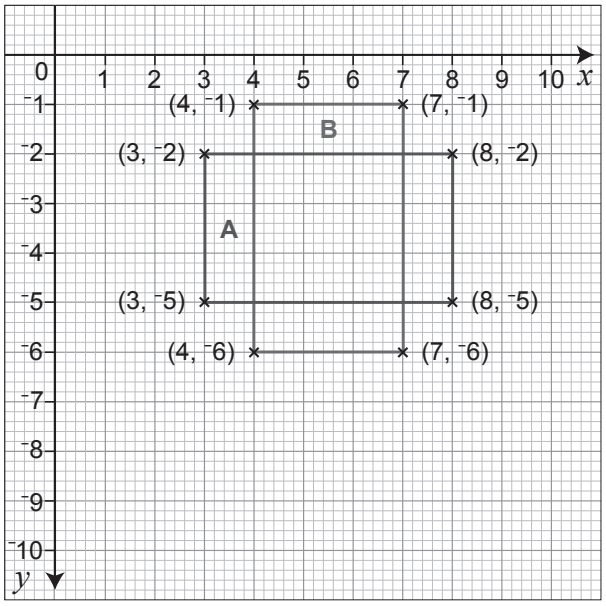

Can you describe the relationship between Shape A and Shape B?

Shape A has been rotated 90° to make Shape B.

GMS Milestone 6:3i

17

Can you plot and connect these coordinates?

You can use a coordinate grid or graph paper.

(2,6) (6,7) (9,2) (5,3) (2,6)

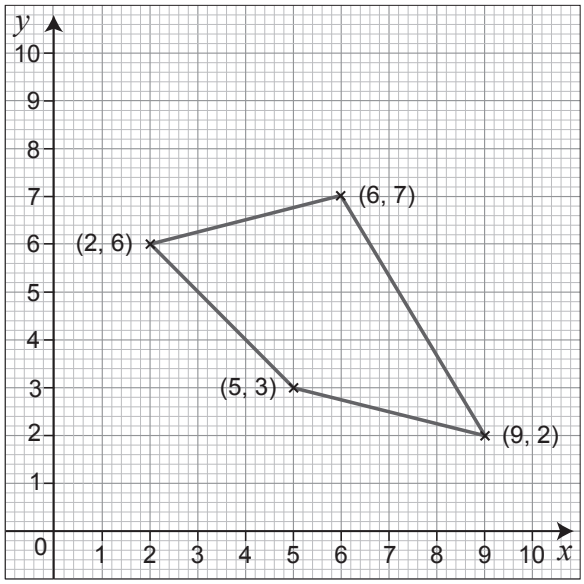

Choose a way to translate the shape and describe the movement and coordinates.

Answers will vary.

GMS Milestone 6:3i

© Oxford University Press 2018. This page can be copied for use in the purchasing school

6.5 Numicon Milestone Assessment – NPC 6 Milestone 5 (Pupil)

Answers are on the answer pages that follow.

1

Aisha builds a growing sequence.

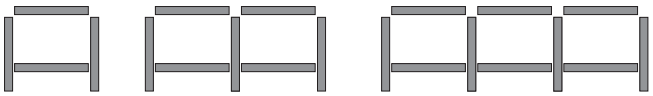

Can you identify the general rule?

Can you use letters or symbols to show this rule?

NPC Milestone 6:5a

2

Here is a think of a number problem:

Think of a number between 20 and 30.
Triple it.
Add 27.
Divide by 3.
Subtract the number you first thought of.
Your answer is 9.

Can you create the algebraic path to prove if this problem works?

NPC Milestone 6:5a

3

The bakery sells rolls to customers in portions of 2, 3, 4, 5, 6 or 8. They bake over 80 rolls a day. What is the smallest number of rolls the bakery can bake to guarantee that there will be no rolls left over that can't be sold in one of these portions?

NPC Milestone 6:5b

4

Elise wants to tile the bathroom floor.
The floor measures 7·2 m × 5·4 m.
Can you work out the price for the different tiles?

60 cm × 60 cm £7·90 per tile 10% off each 100 tiles purchased	20 cm × 20 cm £9·99 per pack of 10 tiles	30 cm × 60 cm £3·94 per tile

NPC Milestone 6:5b

© Oxford University Press 2018. This page can be copied for use in the purchasing school

6.5 Numicon Milestone Assessment – NPC 6 Milestone 5 (Teacher)

1

Aisha builds a growing sequence.

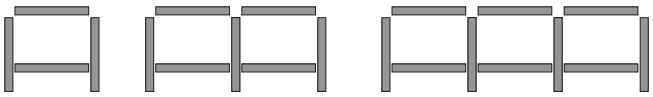

Can you identify the general rule?

Can you use letters or symbols to show this rule?

Answers may vary.

E.g. The general rule is 3 lots of the term number, plus 1.

$1 + 3n$ or $3n + 1$ or $(n \times 3) + 1$

NPC Milestone 6:5a

2

Here is a think of a number problem:

Think of a number between 20 and 30.
Triple it.
Add 27.
Divide by 3.
Subtract the number you first thought of.
Your answer is 9.

Can you create the algebraic path to prove if this problem works?

Yes, it works.

n

$3n$

$3n + 27$

$(3n + 27) \div 3 = n + 9$

$n + 9 - n = 9$

NPC Milestone 6:5a

3

The bakery sells rolls to customers in portions of 2, 3, 4, 5, 6 or 8. They bake over 80 rolls a day. What is the smallest number of rolls the bakery can bake to guarantee that there will be no rolls left over that can't be sold in one of these portions?

120

NPC Milestone 6:5b

4

Elise wants to tile the bathroom floor.
The floor measures 7·2 m × 5·4 m.
Can you work out the price for the different tiles?

60 cm × 60 cm £7·90 per tile 10% off each 100 tiles purchased	20 cm × 20 cm £9·99 per pack of 10 tiles	30 cm × 60 cm £3·94 per tile
12 tiles along and 9 down, 108 tiles in total. **100 tiles for £790 with 10% off is £771 and 8 for £63·20** **Total cost: £834·20**	**36 tiles along and 27 down, 972 tiles in total.** **Need to buy multiples of 10. So 980 tiles or 98 packs.** **Total cost: £979·02**	**Either 24 along and 9 down or 12 along and 18 down.** **216 tiles in total.** **Total cost: £851·04**

NPC Milestone 6:5b

© Oxford University Press 2018. This page can be copied for use in the purchasing school